REAR LAMP BULB REPLACEMENT

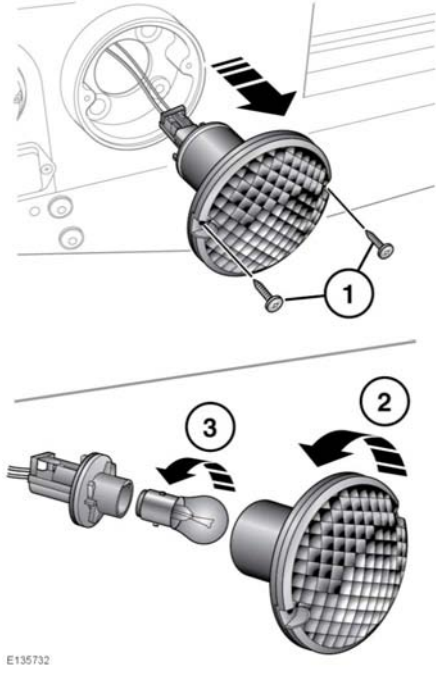

To remove the fog lamp or reversing lamp:

1. Remove the retaining screws and withdraw the unit.
2. Turn the lens counterclockwise to release the lamp unit.
3. Press the bulb into the unit, then turn it and remove.

The procedure for replacing the tail, stop or indicator lamp bulbs is identical to the side lamp bulb replacement procedure. See **71, SIDE LAMP BULB REPLACEMENT**.

HIGH LEVEL BRAKE LAMP BULB REPLACEMENT

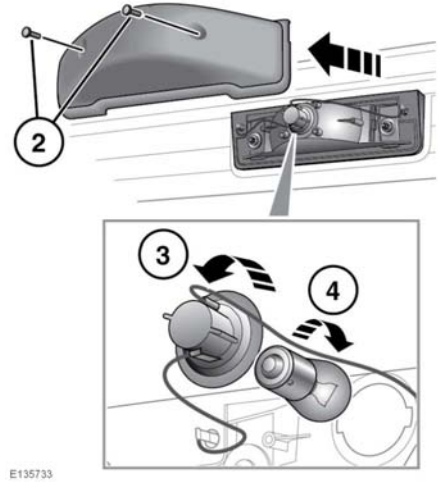

1. Open the taildoor.
2. Remove the retaining screws and remove the cover.
3. Turn the bulb holder counterclockwise to remove.
4. Press the bulb into the unit, then turn it and remove.