INTERIOR LAMP BULB REPLACEMENT

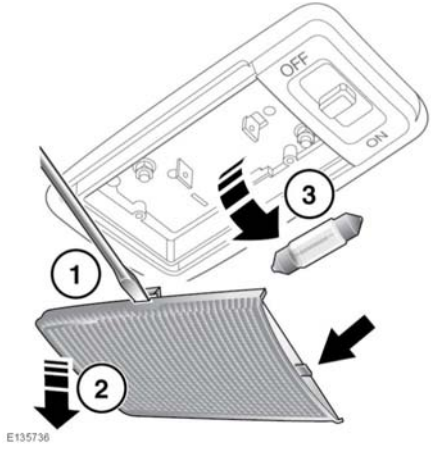

1. Insert a small flat bladed screwdriver into the indent at the side of the lens.
2. Carefully prise the lens from the lamp unit.
3. Remove the bulb.

When refitting, make sure that the tab (arrowed) is inserted first before pushing into position.

PARTS AND ACCESSORIES

⚠ **The fitting of non-approved parts and accessories, or the carrying out of non-approved alterations or conversions, may be dangerous and could affect the safety of the vehicle and occupants and also invalidate the terms and conditions of the vehicle warranty.**

⚠ **Jaguar Land Rover Limited will not accept any liability for death, personal injury or damage to property which may occur as a direct result of fitment of non-approved accessories or the carrying out of non-approved conversions to Land Rover vehicles.**