LOAD CARRYING

All items carried in the luggage area must be properly secured. Loose items can cause injury or death in the event of an accident or sudden manoeuvre.

When a Station Wagon derivative is used for load carrying, observe the following:
All rear seats must be folded securely. See **12, FOLDING AND ERECTING THE SPLIT FOLD SEATS** also see **13, FOLDING AND ERECTING THE SIDE FOLD SEATS**.
The load should be located as far forward as possible and be securely retained.
It is recommended that a cargo barrier is fitted behind the front seats.

When transporting a load in the rear of the vehicle, ensure that the tailgate or tail-door is closed.

Note: *A range of approved luggage/load retention accessories are available from your Land Rover Dealer/Authorised Repairer.*

LUGGAGE ANCHOR POINTS

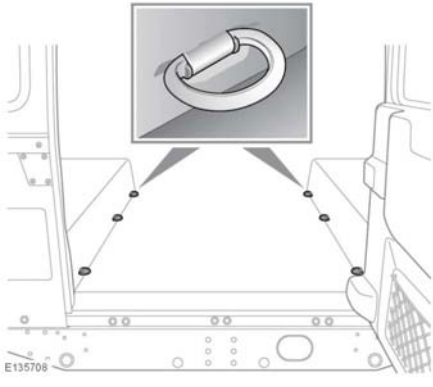

On some vehicles, load securing rings are provided in the rear of the vehicle to assist in safely securing luggage.

ROOF RACKS AND LOAD CARRIERS

Always use an approved roof rack and follow the manufacturer's fitting instructions.

Use of a roof rack or load carrier while driving off-road is not recommended. If it is unavoidable, make sure all load is removed before traversing side slopes.

Note: *A range of approved roof rack systems are available from your Land Rover Dealer/Authorised Repairer.*

Always observe the following precautions when using a roof rack or load carrier:

- Make sure that the maximum axle weights and the Gross Vehicle Weight are not exceeded when a roof rack system is used.
- The roof will accept a maximum load of 150 kg (330 lb). When calculating the roof load the weight of the roof rack must be included.
- Only fit a roof system that has been designed for your vehicle. If in doubt, consult your Dealer/Authorised Repairer.
- Land Rover roof racks have varying load ratings. Check the system being used and do not exceed the stated rating.
- Loads should be distributed evenly and secured within the periphery of the roof rack.
- Always secure the load to the side rails, not just the cross rails.
- A loaded roof rack can reduce the stability of the vehicle, particularly when cornering and in cross winds.