LICENSE PLATE LAMP BULB REPLACEMENT

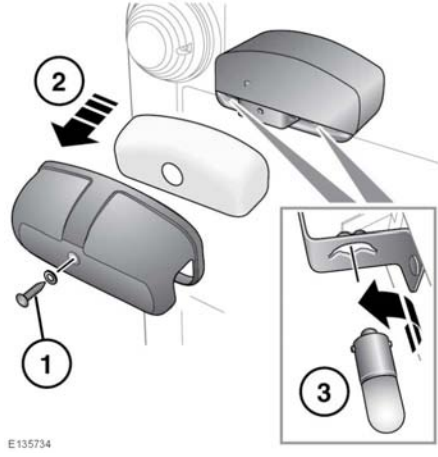

1. Remove the retaining screw.
2. Remove the cover.
3. Press a bulb into the unit, then turn it and remove.

SIDE REPEATER LAMP BULB REPLACEMENT

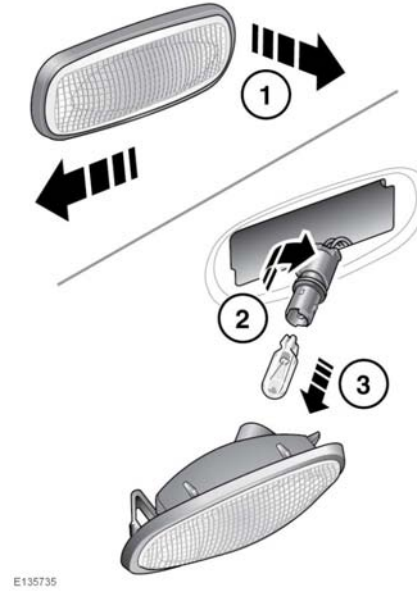

1. Slide the lens forward, lift the rear edge then remove the unit.
2. Rotate the bulb holder and remove from the lamp unit.
3. Pull the bulb out of the holder.

When refitting, ensure that the tab on the lamp unit is inserted into the aperture first, before pushing into position in the wing.