STARTING THE ENGINE

Never start the engine, or leave it running, when the vehicle is in an enclosed space. Exhaust gasses are poisonous and can cause unconsciousness and illness if inhaled.

If the engine fails to start, do not continue cranking as this will discharge the battery.

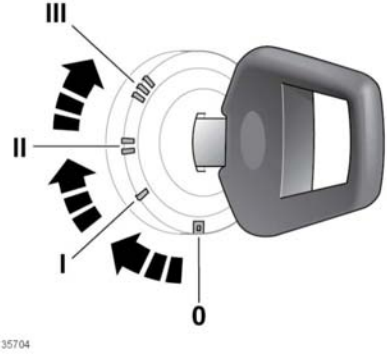

Note: *Do not press the accelerator while starting the engine.*

1. Turn the starter switch to position **II**.
2. Wait until the glow plug warning indicator extinguishes. See **29, GLOW PLUGS (AMBER)**.
3. Fully depress the clutch and turn the starter switch to position **III**. Release the key as soon as the engine starts.

If the engine stops or fails to start, turn the key to position **I** and restart the sequence.