Do not allow the battery posts or terminals to come into contact with your skin. They contain lead, and lead compounds which are toxic. Always wash your hands thoroughly after handling the battery.

Battery electrolyte is both corrosive and toxic and can damage a wide range of materials. Do not allow battery electrolyte to come into contact with fabrics or painted surfaces. Any contaminated surface should be washed down immediately with copious amounts of clean water.

BATTERY ELECTROLYTE LEVEL

Your vehicle is fitted with a low maintenance battery.

In hot climates, frequent checks of the battery electrolyte level and condition are required. If necessary, the battery cells can be topped up using distilled water.

Remove the left hand front seat. See **10, FRONT SEAT BASE REMOVAL**.

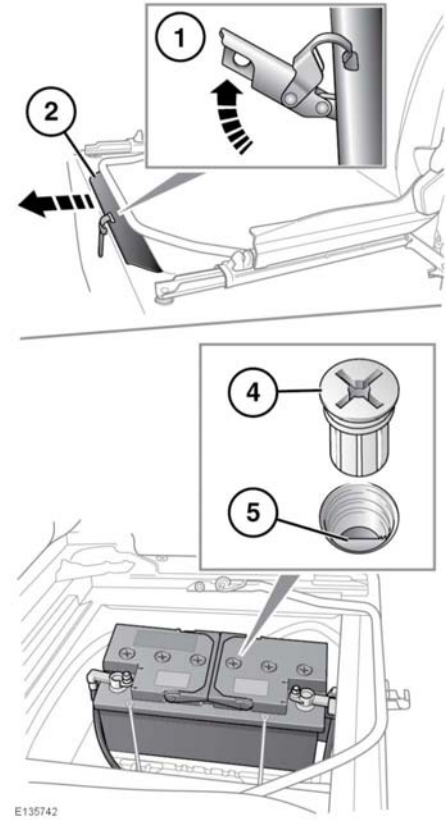

1. Release the buckle at the front of the battery compartment.
2. Slide the lid forward.
3. Clean off the battery.
4. Unscrew the 6 cell plugs.
5. Check that the electrolyte is level with the plastic level indicator.
6. If necessary, top-up with distilled water. Do not overfill.
7. Refit the cell plugs.
8. Refit the battery lid and seat.