TOOL KIT

The jack and tools are stored under the left-hand front seat.

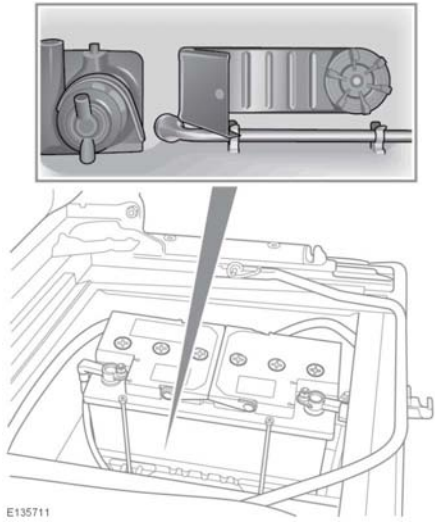

Examine the jack occasionally. clean and grease the moving parts, particularly the ram.

With a bottle jack, check the oil level at the normal vehicle service intervals. Top up with hydraulic oil with viscosity to BS4231 grade 32 and ISO proof 32.

Always return the bottle jack to its fully lowered position and store it upright.

REMOVING THE SPARE WHEEL

Take care when lifting a wheel. Wheels are heavy and can cause injury if not lifted with care.

Spare wheel securing nuts and road wheel securing nuts are not interchangeable.

Do not lay a wheel on its face as this could cause scratch damage.

Note: *In some markets, a locking wheel nut is used on each alloy wheel. There may also be a locking wheel nut securing the spare wheel.*

1. Using the wheel brace from the vehicle tool kit, remove the spare wheel securing nuts.
2. Carefully lift off the wheel and place on the ground.

LOCKING WHEEL NUTS

Locking wheel nuts can be removed only by using the special adapter provided in the tool kit.

Note: *When the vehicle is first supplied the adapter may be stored in the glove compartment or cubby box. It should be removed and stored in the tool kit as soon as possible.*

Note: *A code number is stamped onto the underside of the adapter. This number must be recorded on the security card supplied with the literature pack. If a replacement adapter is required you will be asked to quote this number. The security card must be kept safe, but should not be kept with the vehicle.*