FUSE BOX LOCATIONS

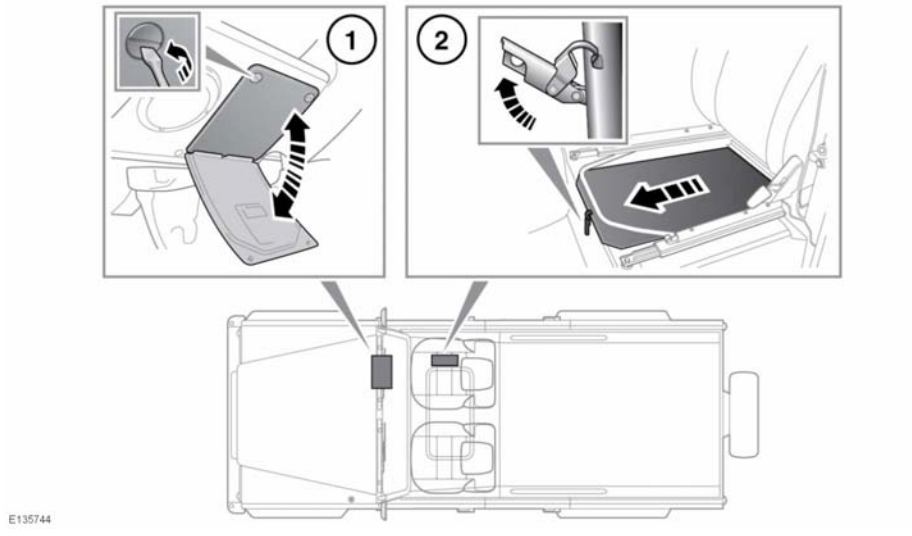

1. Secondary fuse box - underneath the steering column on the driver's side of the vehicle.
2. Main fuse box - underneath the seat base on the right side of the vehicle. See **10, FRONT SEAT BASE REMOVAL**.

CHANGING A FUSE

Fit Land Rover approved replacement fuses of the same rating and type, or fuses of matching specification. Using an incorrect fuse may result in damage to the vehicle's electrical system, and can result in a fire.

If the replacement fuse blows after installation the system should be checked by your Land Rover Dealer/Authorised Repairer.

Note: *Land Rover recommends that relays and fuses FL1 - FL12 should be replaced only by qualified persons.*

Always switch off the ignition and the affected electrical circuit before replacing a fuse.

The fuse numbers and positions are shown on the underside of the seat base.