3. Close the jack release valve by using the notched end of the lever. Slot the lever over the release valve then turn the valve fully clockwise.
4. Insert the lever into the receiver and twist to lock it into position.
5. To raise the jack, pump the lever up and down.
6. To lower the jack, twist and pull out the lever from the receiver. Slot the lever over the release valve then slowly turn the valve counterclockwise. The weight of the vehicle will push the jack down.

JACKING POINTS

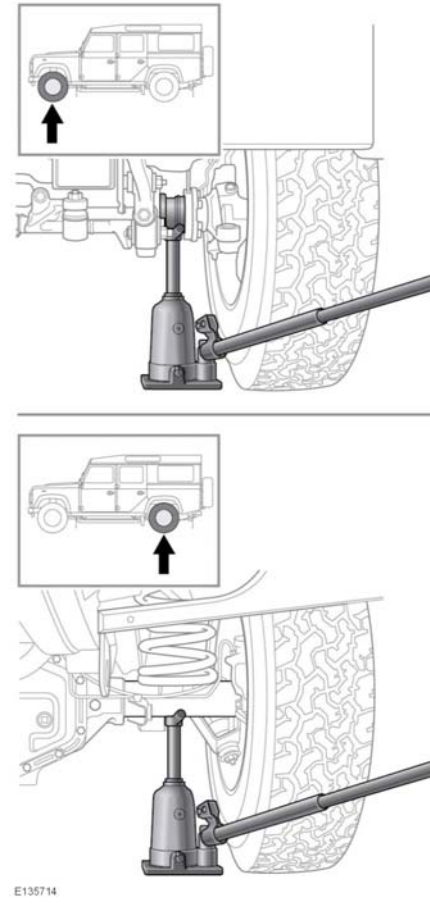

WHEEL CHANGING SAFETY

Before raising the vehicle, or changing a wheel, make sure that you read, and comply with the following warnings:

⚠ **Always find a safe place to stop, off of the highway and away from traffic.**

⚠ **Make sure that the vehicle is on firm level ground.**