Standard pick-up

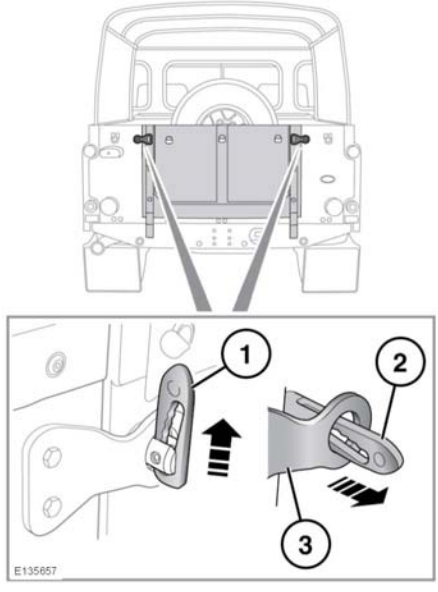

To unlatch the tailgate:

1. Slide the latch plates up to their highest position.
2. Pivot the latch plates down through 90 degrees.
3. Pull the tailgate over both the latch plates.

Reverse the procedure to close the tailgate.

High capacity pick-up

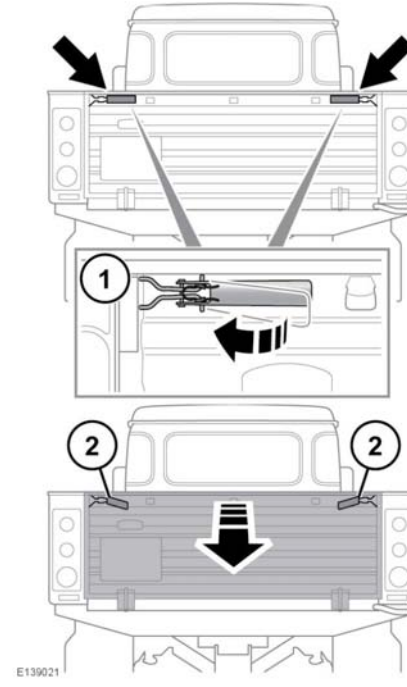

1. Lever the latches outwards, toward the sides of the vehicle.
2. Hold the latches open and carefully lower the tailgate.

Reverse the procedure to close the tailgate.

EMERGENCY KEY ACCESS (EKA)

In the event of a remote control failure, follow the procedure to enter a unique four digit code. This will disarm the alarm system and re-mobilise the engine.

The code number will be recorded on the Security card. Do not leave this card in the vehicle.