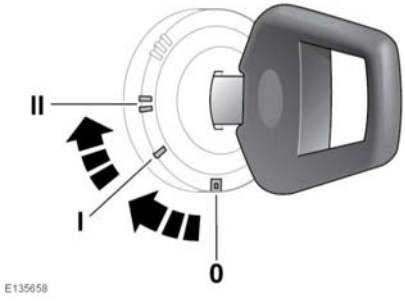

1. Remove the remote control from the key ring and keep it well away from the starter switch.
2. Unlock the driver's door, enter the vehicle and close the door.

   Note: *When the door is opened the alarm will sound for 30 seconds.*
3. Insert the key into the starter switch and turn to position **II** until the alarm sounds again.
4. Turn the key to position **0** then open and close the driver's door.
5. Enter the first part of the EKA code by turning the key to position **II** then back to position **0** the same number of times as the EKA number. For example: if the number is 4, turn the key to position **II** and back to position **0**, 4 times.
6. Open and close the driver's door to confirm the entry.
7. Follow the same procedure to enter the next 3 numbers.

When the code is entered correctly, the alarm indicator in the instrument pack will extinguish, the alarm will be disarmed and the engine will re-mobilise.

If the code is entered incorrectly, the alarm indicator will continue to illuminate and the engine is still immobilised.

Before starting the process again, turn the key to position **II** and hold it for 5 seconds to reset.

After 3 failed attempts the security system invokes a delay period of 30 minutes, during which time a further attempt to enter the EKA code will not be accepted.

REMOTE KEY FOB BATTERY REPLACEMENT

When the battery is due for replacement the following symptoms will be apparent:

- The remote control will work only with a second press of the unlock button.
- The indicators will not flash when the alarm is disarmed.
- Alarm indicator in instrument pack continues to flash rapidly after initial 10 second period of rapid flashing.

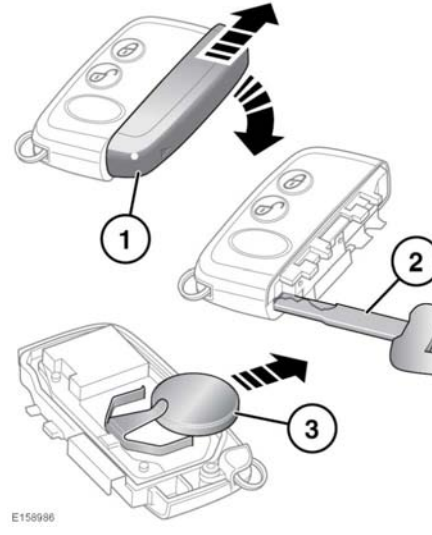

To replace the battery:

1. Remove the cover by sliding it in the direction of the arrows.

2. Use the key blade of the black key to separate the Key fob body.
3. Fit a new and unused CR2032 type battery (available from a Dealer/Authorised Repairer) with the positive (+) side upwards.

Note: *Avoid touching the new battery. Moisture/oil from fingers can reduce battery life and corrode the contacts.*

Note: *If the low battery warning does not extinguish, this indicates that the replacement battery is not in a new and unused condition.*

Refit the parts in reverse order, ensuring that they click securely into place.



Battery disposal: Batteries contain harmful substances and must be disposed of correctly. Seek advice on disposal from a Dealer/Authorised Repairer and/or your local authority.