Do not work beneath the vehicle with the wheel changing jack as the only means of support.

Keep your hands and clothing away from drive belts, pulleys and fans. Some fans may continue to operate after the engine has stopped.

Remove metal wrist bands and jewellery, before working in the engine compartment.

Do not touch electrical leads or components while the engine is running, or with the starter switch turned on.

Do not allow tools or metal parts of the vehicle to make contact with the battery leads or terminals.

FUEL SYSTEM

Under no circumstances should any part of the fuel system be dismantled or replaced by anyone other than a suitably qualified vehicle technician.

Make sure that sparks and naked lights are kept away from the engine compartment.

Wear protective clothing, including, where practicable, gloves made from an impervious material.

POISONOUS FLUIDS

Fluids used in motor vehicles are poisonous and should not be consumed or brought into contact with open wounds.

For your own safety, always read and obey all instructions printed on labels and containers.

USED ENGINE OIL

Prolonged contact with engine oil may cause serious skin disorders, including dermatitis and cancer of the skin. Always wash thoroughly after contact.

It is illegal to pollute drains, water courses or soil. Use authorised waste disposal sites to dispose of used oil and toxic chemicals.

OPENING THE BONNET

Do not drive with the bonnet retained by the safety catch alone. The bonnet must be fully secured before driving.

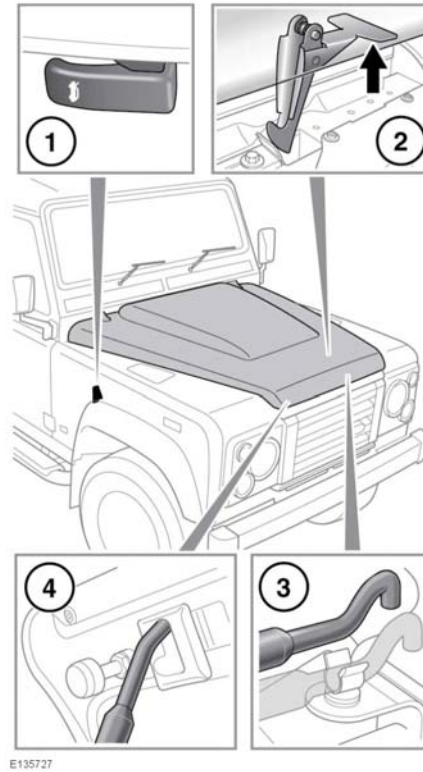

E135727