SUNROOF OPERATION

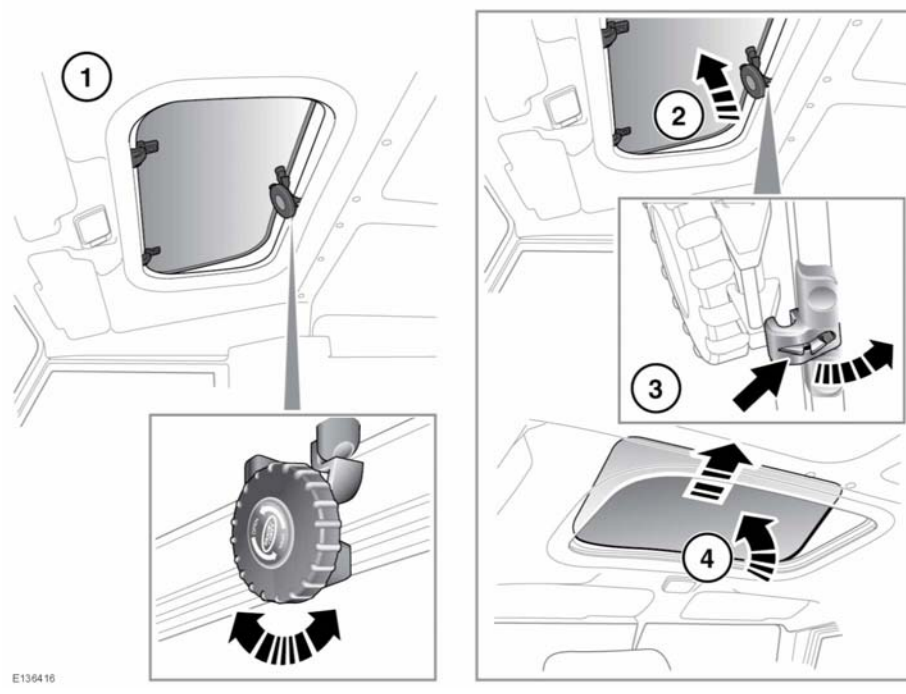

1. Turn the handwheel clockwise to open and counterclockwise to close the sunroof.

Make sure that the sunroof is not obstructed when opening or closing.

Do not allow passengers to extend any part of their bodies through the sunroof aperture while the vehicle is moving. Flying debris, branches of trees, etc, could cause injury.

2. To remove the sunroof, make sure it is fully opened first.

Do not remove the sunroof while the vehicle is moving.

3. Push the release catch rearwards and disengage the handwheel mechanism.
4. Using both hands, tilt the sunroof upwards, then lift it rearwards to disengage the 2 locating pins.
5. Rotate the sunroof so that it fits through the aperture and lower it into the vehicle. Store the sunroof securely.

Do not store the removed sunroof loose in the vehicle.