Do not place the lamp unit face down on hard or abrasive surfaces. Doing so may scratch the surface of the lens.

HEADLAMP BULB REPLACEMENT

Halogen bulbs are used for high beam and low beam headlamps. Take care not to touch the glass part of the bulb with your fingers; always use a cloth to handle the bulb. If necessary use methylated spirits to remove finger prints.

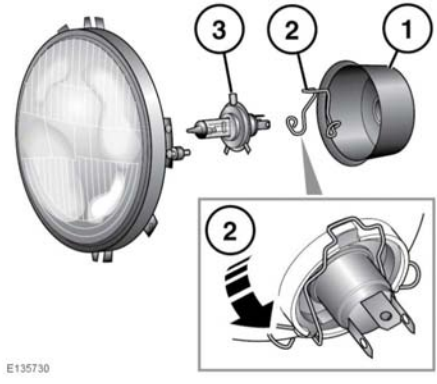

1. Remove the cover.
2. Release the spring clip that secures the bulb.
3. Remove the bulb.

When refitting the cover, make sure there is a good contact seal around the new bulb. Refit the electrical connector.

SIDE LAMP BULB REPLACEMENT

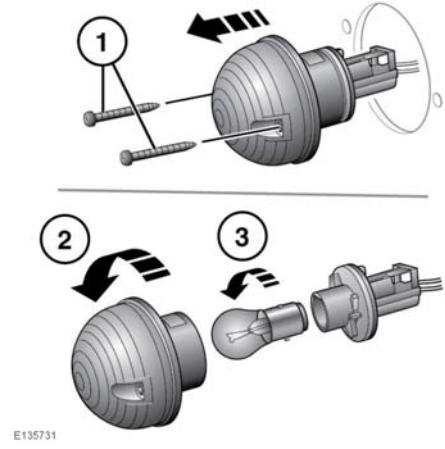

With the headlamp unit removed:

1. Remove the retaining screws and withdraw the unit.
2. Turn the lens counterclockwise to release the lamp unit.
3. Press the bulb into the unit, then turn it and remove.

DIRECTION INDICATOR BULB REPLACEMENT

This procedure is identical to the side lamp bulb replacement procedure. See **71, SIDE LAMP BULB REPLACEMENT**.