FITTING THE SOFT TOP ROOF

Note: *It is recommended that soft top fitting is performed by 2 people.*

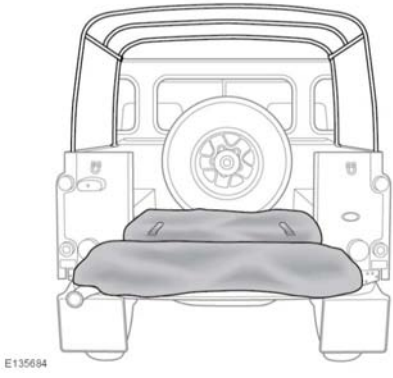

With the roof frame in position, lay the canopy on the open tailgate.

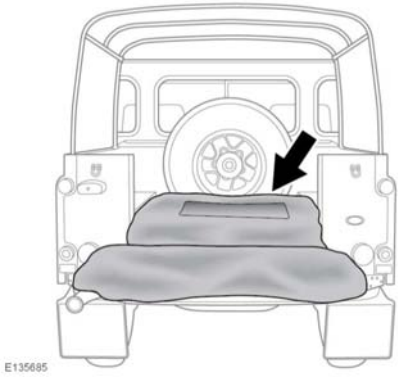

Unfold the canopy into the load area.

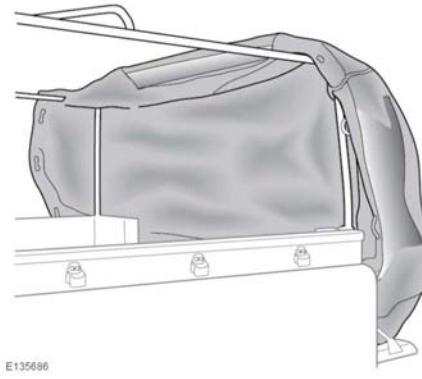

From the rear, lift the canopy over the frame, ensuring that the front window is against the cab window.

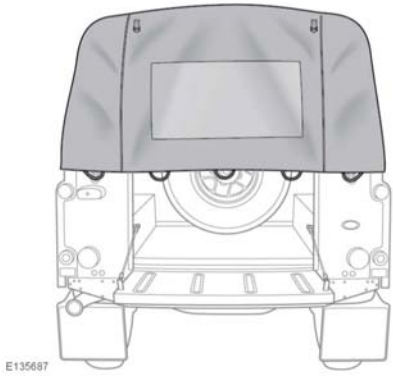

Prior to fastening the canopy to the vehicle, it should resemble this illustration.

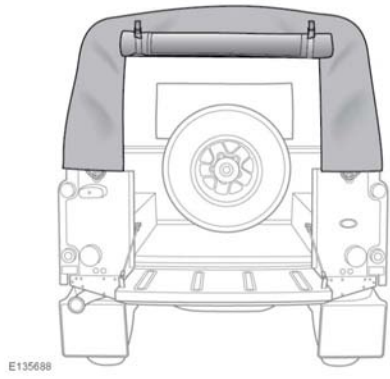

Roll up the rear screen and secure with the straps.

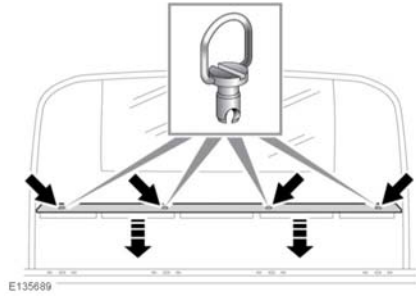

Remove the spare wheel.

Slot the metal retaining strip into the canvas pocket below the cab window. Align the holes in the strip with those in the body and insert the 4 canopy turnbuckles. Twist the turnbuckles clockwise to secure.

Refit the spare wheel.

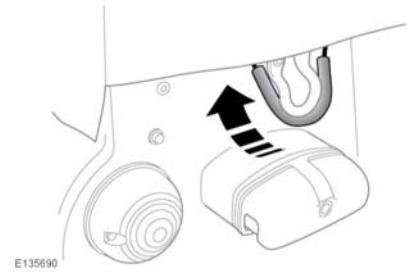

Pull and attach both rubber hoops to the hooks above the rear lamps.

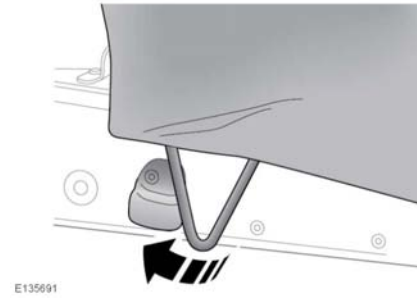

Starting at the front of the canopy, loop the tie rope over each of the hooks along the sides of the vehicle. Make sure that each loop is tightened before the next loop is made.

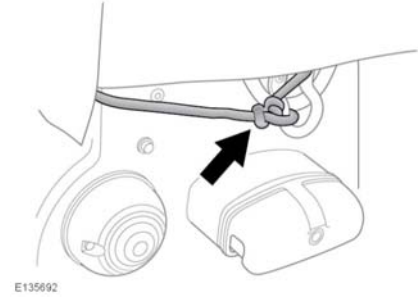

Fasten the rope to the hook above the rear lamps.

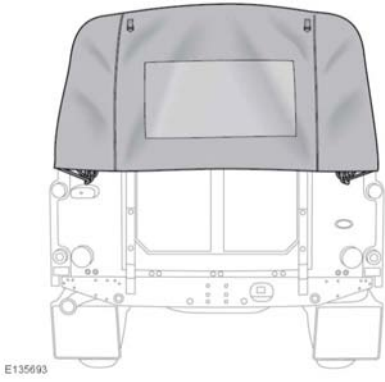

Unroll the canopy rear screen and pull each zip downwards to fasten.

Close the tailgate then pull the rubber hoops over the hooks.

Note: *The removal process is a reversal of the fitting process.*