TOW BAR DIMENSIONS AND MOUNTING POINTS

Vehicles without rear tow step

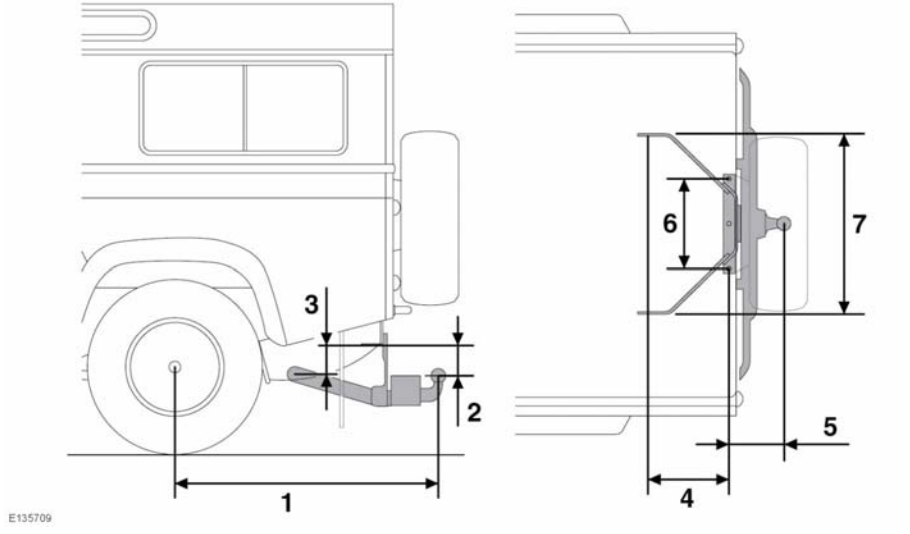

Note: *Dimensions are in millimetres and apply to officially released Land Rover towing equipment.*

		90	110	110* & 130
1	Wheel centre to centre of towball	796	1005	1201
2	Centre of inner attachment points to centre of towball	86	86	86
3	Centre inner attachments to centre outer attachments	86	82	85
4	Centre inner attachments to centre outer attachments	208	301	301
5	Centre of inner attachments to centre of towball	107	107	303
6	Distance between centres of inner attachments	313	313	313
7	Distance between centres of outer attachments	744	635	635

*110 (High capacity pick-up).

if a NATO hook or a Jaw and Pintle type towing accessory is to be fitted, do not attach them directly to the chassis rear cross member. It is essential that an adapter plate kit is also fitted. Consult your Dealer/Authorised Repairer.

A variety of tow bar mounting points are available. The precise points to use will depend upon the type of hitch. If unsure, consult your Dealer/Authorised Repairer.

Vehicles fitted with rear tow step

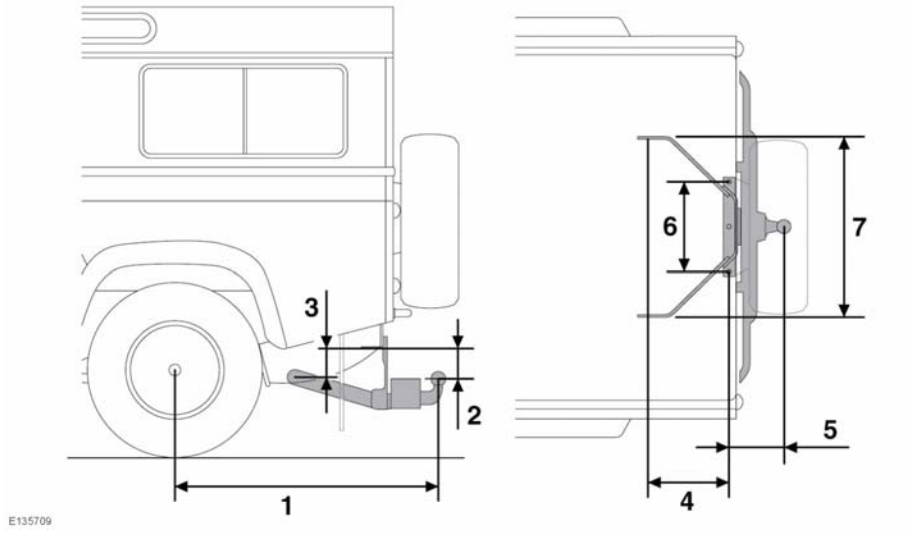

Note: *Dimensions are in millimetres and apply to officially released Land Rover towing equipment.*

		90 SW	110 SW
1	Wheel centre to centre of towball	850	1135
2	Centre of inner attachment points to centre of towball	36	36
3	Centre inner attachments to centre outer attachments	137	85
4	Centre inner attachments to centre outer attachments	213	301
5	Centre of inner attachments to centre of towball	238	238
6	Distance between centres of inner attachments	313	313
7	Distance between centres of outer attachments	744	635