FUSE BOX LOCATIONS

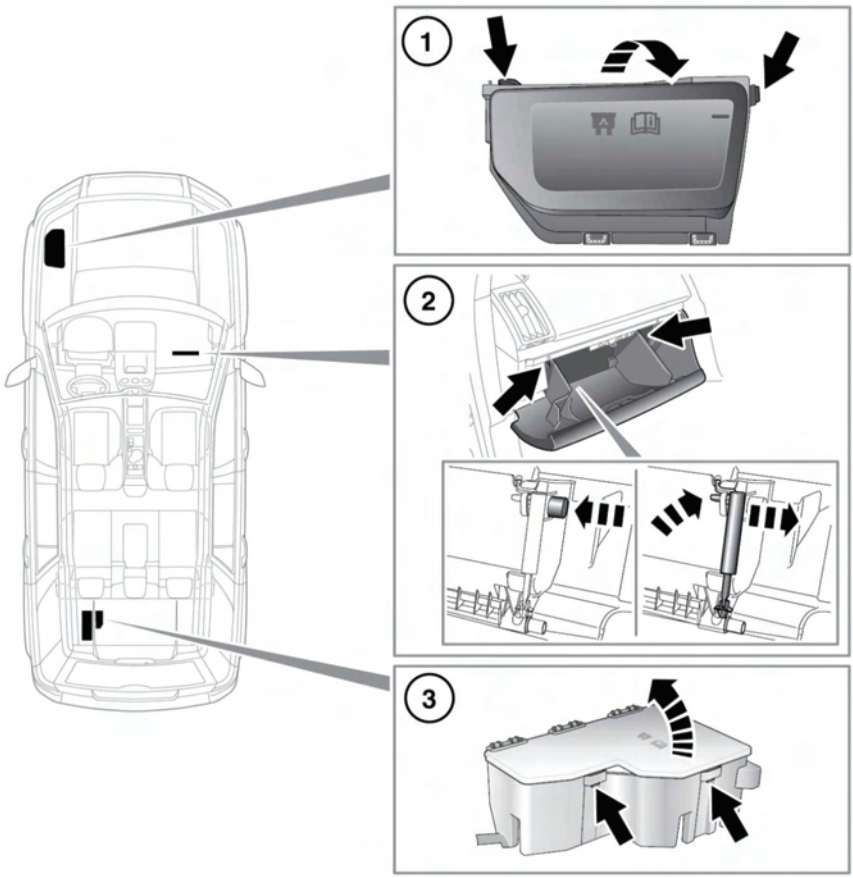

E145595

When a fuse box lid is removed, take care to protect the box from moisture, and refit the lid at the earliest opportunity.

1. Engine compartment fuse box.
   - The fuse numbers and positions are shown on the inside of the fuse box cover.