FOLDING THE REAR SEATS

Always ensure that objects carried in the vehicle are secured properly.

Never allow passengers to travel in the load space under any circumstances.

Ensure that when the backrest(s) is raised, the locking mechanism is fully engaged and locked in position.

When erecting the rear seats, ensure that seat belts are correctly routed in front of the seats and not trapped behind them.

Ensure the head restraints are raised to the correct position before the seats are used by a passenger.

The split fold rear seat can be folded completely to accommodate large loads, or partially to accommodate large loads and still retain seating for passengers.



To fold the seat(s):

1. Fully lower the head restraint(s).
2. Pull the strap on the required cushion, to raise to the vertical position.
3. Pull the seat backrest release lever, then lower the backrest until locked into place.

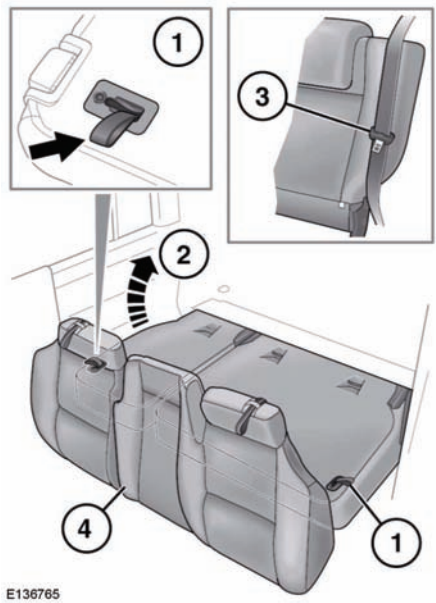

To raise the seat(s):

1. Pull the strap on the back of the seat vertically, to unlock the backrest.
2. Raise the backrest until it clicks into position and the release lever is locked in position.
3. Make sure the seat belt is correctly routed in front of the backrest.
4. Push the seat cushion firmly into position.

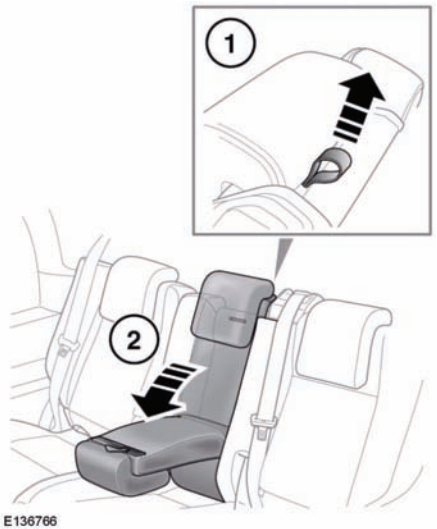

To lower the armrest:

1. Pull the loop at the top of the center seat.
2. Push the armrest down to the required position.

   To stow the armrest, raise it and push it into the seatback until it clicks in place.