TIRE PRESSURE MONITORING SYSTEM

⚠WARNING

TPMS provides a low pressure warning and does not re-inflate your tires. Tire pressures should be checked regularly using an accurate pressure gauge when cold.

⚠WARNING

TPMS can NOT register damage to a tire. Regularly check the condition of your tires, especially if the vehicle is driven off-road.

NOTICE

When inflating tires, care should be taken to avoid bending or damaging the TPMS valve. Always ensure correct alignment of the inflation head to the valve stem.

Note: *Non-approved accessories may interfere with the system. If this occurs,* ***TIRE PRESSURE MONITORING FAULT*** *is displayed in the message center.*

Note: *Different types of tire may affect the performance of the TPMS. Always replace tires in accordance with recommendations.*

Your vehicle is equipped with a TPMS which monitors pressure in each tire, including the full-size spare tire. Compact spare tires are not fitted with sensors and are consequently not monitored.

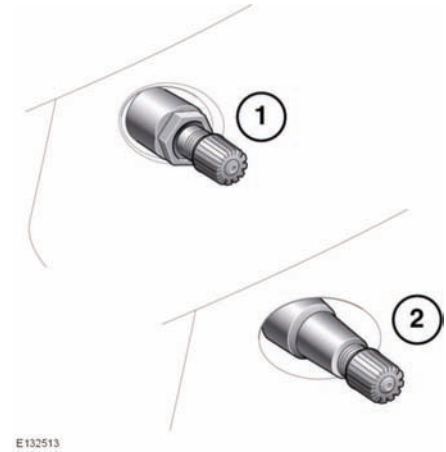

Wheels fitted with TPMS can be visually identified by the external metal lock nut and valve (**1**). All Land Rover non-TPMS wheels have a rubber valve fitted (**2**).

TPMS OPERATION

The TPMS monitors the pressure of the tires via sensors located in each wheel and a receiver located within the vehicle. Communication between sensor and receiver is via Radio Frequency (RF) signals.



The tire pressure warning comprises a yellow warning telltale within the instrument panel, and the associated messages within the message center.

Each tire, including the spare (if provided) should be checked monthly when cold and inflated to the inflation pressure recommended by the vehicle manufacturer on the vehicle placard or tire inflation pressure label. (If your vehicle has tires of a different size than the size indicated on the vehicle placard or tire inflation

pressure label, you should determine the proper tire inflation pressure for those tires).

As an added safety feature, your vehicle has been equipped with a tire pressure monitoring system (TPMS) that illuminates a low tire pressure telltale when one or more of your tires is significantly under-inflated.

Accordingly, when the low tire pressure telltale illuminates, you should stop and check your tire as soon as possible, and inflate them to the proper pressure. Driving on a significantly under-inflated tires causes the tire to overheat and can lead to tire failure. Under-inflation also reduces fuel efficiency and tire tread life, and may affect the vehicle's handling and stopping ability.

Please note that the TPMS is not a substitute for proper tire maintenance, and it is the driver's responsibility to maintain correct tire pressure, even if under-inflation has not reached the level to trigger illumination of the TPMS low tire pressure telltale.

The TPMS may issue a warning if the under-inflation becomes significant. When driving through variable climatic conditions, the TPMS warnings may be intermittent.

Your vehicle has also been equipped with a TPMS malfunction indicator to indicate when the system is not operating properly.

The TPMS malfunction indicator is combined with the low tire pressure telltale. When the system detects a malfunction, the telltale will flash for approximately one minute and then remain continuously illuminated. This sequence will continue upon subsequent vehicle start-ups as long as the malfunction exists.

When the malfunction indicator is illuminated, the system may not be able to detect or signal low tire pressure as intended. TPMS malfunctions may occur for a variety of reasons, including the installation of replacement or alternate tires or wheels on the vehicle that prevent the TPMS from functioning properly. Always check the TPMS malfunction telltale after replacing one or more tires or wheels on your vehicle to ensure that the replacement or alternate tires and wheels allow the TPMS to continue to function properly.

A supplementary text message will accompany the system indicator and will display **TIRE PRESSURE MONITORING FAULT**.

FULL SIZE SPARE AND TIRE CHANGE

The system will automatically recognize any changes in wheel positions. The vehicle must be stationary for 15 minutes during the wheel and tire change (see **210, WHEEL CHANGING**), to ensure that the system can detect the change. After driving above 18 mph (25 km/h), any deflation warning should clear within approximately 5 minutes.

TEMPORARY USE SPARE WHEEL AND TIRE CHANGE

If the compact spare wheel is fitted, the system will automatically recognize the change in wheel positions. After approximately 10 minutes of driving above 18 mph (25 km/h), the message **FRONT (REAR) RIGHT(LEFT) TIRE PRESSURE NOT MONITORED** will be displayed, accompanied by illumination of the warning lamp.

The warning lamp will first flash and then illuminate continuously. Extended use of the compact spare wheel will trigger the message **TIRE PRESSURE MONITORING SYSTEM FAULT**.

This TPM system display sequence will be activated at every ignition cycle, until the temporary spare wheel is replaced by a full-size wheel and tire assembly.

Note: *If in use, always replace the temporary spare wheel before having a TPM system fault investigated.*

TIRE CHANGING

Always have your tires serviced or changed by a qualified technician.

Care must be taken to avoid contact between the bead of the tire and the sensor during removal and refitting of the tire, otherwise the sensor may become damaged and/or inoperable.

NOTICE

Valve stem seal, washer, nut, valve core and cap should be replaced at every tire change. Valve stem seal, washer and nut must be replaced if valve retention nut is loosened. Sensor units and nuts must be refitted using correct torque figures and associated profile. Damage to the vehicle may result if these precautions are not taken.

Sensors can be removed from the wheel by the unscrewing of the valve retention nut.

REPLACEMENT SENSOR

Should the sensor require replacing, it should be carried out by a Land Rover Retailer/ Authorized Repairer.

A replacement sensor must be fitted to a running wheel in order to be recognized by the TPMS. Recognition only occurs when the vehicle is driven above 18 mph (25 km/h) for approximately 10 minutes.

Should the TPMS warning for any wheel not clear, even after ensuring correct inflation and driving for more than 10 minutes above 18 mph (25 km/h), consult your Land Rover Retailer/Authorized Repairer.

TYPE APPROVAL NUMBERS

The TPMS devices comply with part 15 of the FCC rules and IC - RSS-210. Operation is subject to the following two conditions:

(1) this device may not cause harmful interference, and

(2) this device must accept any interference received, including interference that may cause undesired operation of the device.

Note: *Changes or modifications not expressly approved by the manufacturer could void the user's authority to use the equipment.*

The TPMS radio frequency approval numbers for the USA and Canada are:

USA FCC ID:	KR5S120123
	KR5S180021
	5WK49097
Canada IC:	267T-S120123
	267T-S180021
	267T-5WK49097