CHANGING A ROAD WHEEL

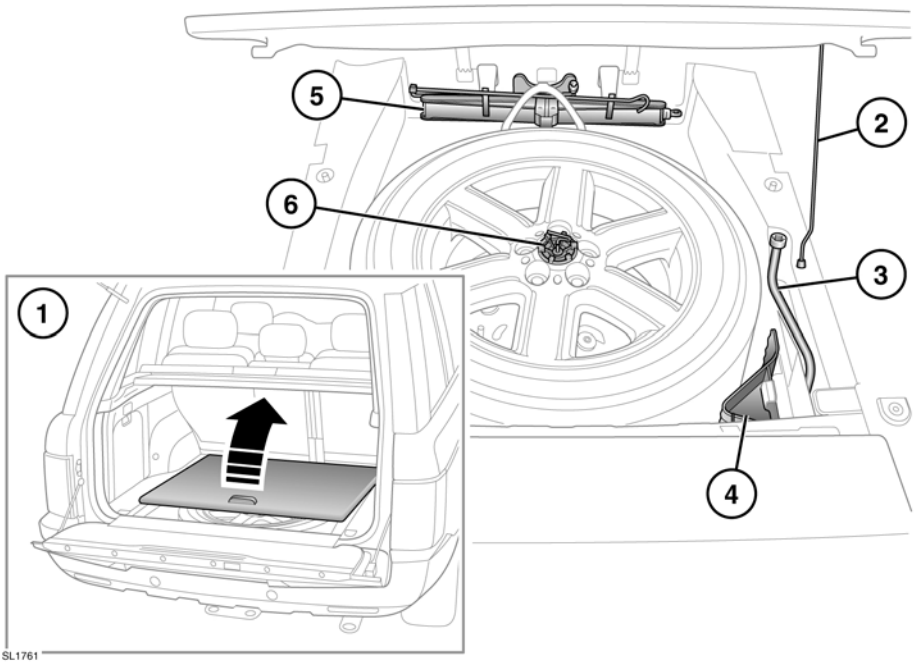

Before accessing the spare wheel well, fold forward the rear edge or the loadspace cover.

1. Floor hatch.
2. Hatch support stay.
3. Wheel nut brace.
4. Wheel chocks.
5. Jack.
6. Wheel retaining bolt.

WARNING: Wheels are heavy and if handled incorrectly may cause injury. Use extreme caution when lifting or maneuvering the wheels.

WARNING: Always secure the spare wheel, or the removed wheel, in the correct position using the retaining bolt.

Always remove the spare wheel before jacking the vehicle.

Note: *Examine the jack occasionally, clean and grease the moving parts, particularly the screw thread, to prevent corrosion.*

DEPLOYABLE SIDE STEPS

If the vehicle is fitted with the optional deployable side steps, DO NOT attempt to jack up the vehicle. The side steps must be removed before jacking can proceed. Refer to the information supplied with the side steps for removal details. Alternatively, contact the appropriate recovery service for assistance.

USING WHEEL CHOCKS

WARNING: Before raising the vehicle, the wheel diagonally opposite the one to be removed must be chocked.

WARNING: Always chock the wheels using suitable wheel chocks. Place the chocks on both sides of the wheel diagonally opposite the wheel to be changed.

WARNING: If jacking the vehicle on a slight slope is unavoidable, place the chocks on the downhill side of both wheels on the axle not being raised.

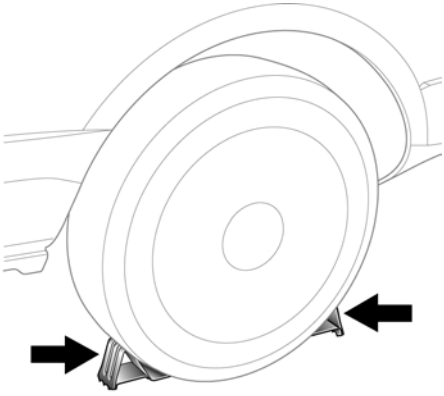

Both chocks must be used. Position them on opposite sides of the wheel and fully push them home against the tire.

Note: *If jacking the vehicle on a slope is unavoidable, place the chocks on the downhill side of both wheels on the axle not being raised.*

REMOVING THE SPARE WHEEL

WARNING: Remove the spare wheel prior to jacking the vehicle, to avoid destabilizing the vehicle when raised.

CAUTION: Do not use power tools to loosen the spare wheel. Doing so may damage the mechanism.

1. Open the spare wheel access hatch in the loadspace area.
2. Turn the wheel retaining bolt counter clockwise until it comes free.
3. Remove the spare wheel.

WHEEL CHANGING SAFETY

Before raising the vehicle or changing a wheel, ensure that you read and comply with the following warnings.

WARNING: Always find a safe place to stop, off the highway and away from traffic.

WARNING: Ensure that the vehicle and jack are both on firm level ground. Do not jack the vehicle if it is over a metal grating or manhole cover.

WARNING: Apply the parking brake. Engage Park (P).

WARNING: Ensure the air suspension is set to off-road height.

WARNING: Switch on the hazard warning lamps.

WARNING: Ensure that the front wheels are in the straight ahead position and engage the steering lock.

WARNING: Disconnect trailer/caravan from vehicle.

WARNING: Ensure that all passengers and animals, are out of the vehicle and in a safe place away from the highway.

WARNING: Place a warning triangle at a suitable distance behind the vehicle, facing towards oncoming traffic.

WARNING: Take care when lifting the spare wheel and removing the road wheel. The wheels are heavy and can cause injuries if not handled correctly.

OPERATING THE JACK

WARNING: No person should place any portion of their body under a vehicle that is supported by a jack.

WARNING: Never place anything between the jack and the ground, or between the jack and the vehicle.

WARNING: Always position the jack from the side of the vehicle, in line with the appropriate jacking point.

WARNING: Always use the complete jacking lever assembly throughout, to minimize any chance of accidental injury.

CAUTION: Jack up the vehicle using only the jacking points described, or damage to the vehicle could occur.

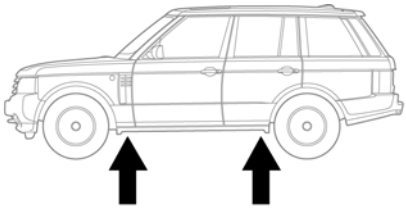

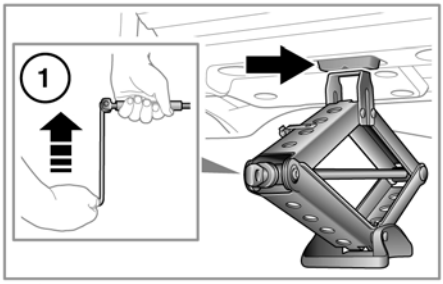

SL1396

1. Locate the jack under the relevant jacking point.
2. Attach the cranking lever to the jack using the adaptor. Fit the wheel nut brace to the end of the cranking lever.
3. Rotate clockwise to raise until the jack pin locates into the jacking point.
4. Continue raising the vehicle until the wheel is clear of the ground.

WHEEL CHANGING

WARNING: Take care when loosening the wheel nuts. The wheel brace may slip off if not properly attached and the wheel nuts may give way suddenly. Either unexpected movement, may cause an injury.

1. Before rasing the vehicle, use the wheel nut brace to slacken the wheel nuts half a turn counter clockwise.
2. Operate the jack to raise the vehicle.
3. Remove the wheel nuts and place them together where they cannot roll away.
4. Remove the wheel and place to one side. Do not lay the wheel on its face, as this may damage the finish.
5. Fit the spare wheel to the hub.
6. Re-fit the wheel nuts, and lightly tighten them. Ensure that the wheel is making contact with the hub evenly.
7. Ensure that the space under the vehicle is clear of obstructions and lower the vehicle slowly and smoothly.
8. With all wheels on the ground and the jack removed, fully tighten the wheel nuts. The wheel nuts must be tightened in sequence (see illustration) to the correct torque of 140 Nm (103 lb.ft).

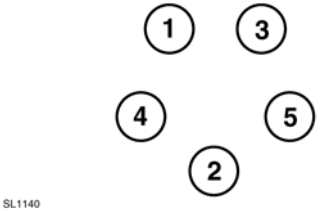

SL1140

Note: *If it is not possible to torque the wheel nuts when a wheel is replaced, they should be set to the correct torque as soon as possible.*

Using a suitable blunt tool, knock the center cap out of the removed wheel. Using hand pressure only, press the center cap into the newly fitted spare.

Check and adjust the tire pressure as soon as possible.

STOWING THE CHANGED WHEEL AND TOOLS

WARNING: Do not stow the wheel while the vehicle is raised on the jack.

WARNING: After wheel changing, always secure tools, chocks, jack and replaced wheel in their correct stowage positions. Such objects, if not properly stowed, can become flying missiles in a crash or rollover, potentially causing injury or death.

WARNING: Wheels are heavy and if handled incorrectly may cause injury. Use extreme caution when lifting or maneuvering the wheels.

CAUTION: Do not use power tools to tighten the spare wheel retaining bolt. Doing so may damage the mechanism.

1. Place the wheel into the storage position with the styled face uppermost.
2. Locate and tighten the retaining bolt until the wheel is secure.
3. Ensure that all tools are secured in their correct stowage positions.