STEERING COLUMN LOCK

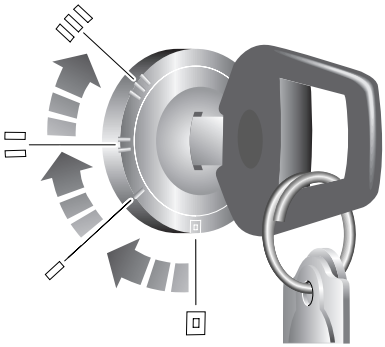

H3584

To unlock the steering column
Insert the key FULLY and turn the starter switch to position 'I'. A small movement of the steering wheel may be necessary to disengage the steering lock while turning the switch.

To lock the steering column
Turn the key to position **'0'** and withdraw it from the starter switch. Turn the steering wheel slightly until the lock engages.

WARNING

Once the steering lock is engaged, it is impossible to steer the vehicle. DO NOT remove the key or turn the starter switch to position '0' while the vehicle is in motion.

STARTER SWITCH

The starter switch is located to the left of the steering column, and uses the following sequence of key positions to operate the steering lock, electrical circuits and starter motor:

Position '0'

- Steering locked (if key is removed).
- Most lighting circuits are operational, including: sidelights, headlights and hazard warning lights.

Position 'I'

- Steering unlocked.
- Radio/cassette player can be operated.

Position 'II'

- All instruments, warning lights and electrical circuits are operational.

Position 'III'

- Starter motor operates.

  Release the key immediately the engine starts (the key will automatically return to position 'II'). Note that operation of position 'I' electrical functions will be interrupted during engine cranking.

STARTING - Diesel engines

WARNING

Never start or leave the engine running in an unventilated building - exhaust gases are poisonous and contain carbon monoxide, which can cause unconsciousness and may even be fatal.

Before starting the engine and driving, ENSURE you are familiar with the precautions shown under *'CATALYTIC CONVERTER*', page 82*.

In particular, you should be aware that if the engine fails to start, continued use of the starter may result in unburnt fuel damaging the catalytic converter.

1. Check that the handbrake is applied and that the gear lever is in neutral.
2. Switch off all unnecessary electrical equipment.
3. Insert the starter key and turn the switch to position 'II'. Wait until the glow plug warning light extinguishes.

   NOTE: *The waiting time will vary according to the engine coolant temperature (when the engine is hot, the glow plug warning light will extinguish almost immediately).*
4. Turn the key to position 'III' to operate the starter motor. DO NOT press the accelerator pedal while starting. RELEASE THE KEY as soon as the engine is running.

If the engine stalls or fails to start, you MUST return the starter switch to position 'I' before attempting to restart; the engine will not start by turning the starter switch from position 'II'.

In temperate climates DO NOT operate the starter for longer than 10 seconds. If the engine fails to start, switch off and wait 10 seconds before re-using the starter.

NOTE: *Continued use of the starter will not only discharge the battery, but may cause damage to the starter motor.*

NOTE: *In temperate climates, the battery charging and oil pressure warning lights should extinguish as soon as the engine is running.*

In cold weather, or when the battery is in a low state of charge, depress the clutch pedal while starting and hold it down until the engine is running. This will reduce the load on the battery.

Precautions

- **The diesel engine must not be run above idle speed until the oil pressure warning light extinguishes. This will ensure that the engine and turbo-charger bearings are properly lubricated before being run at speed.**
- **Similarly, ALWAYS allow the engine to idle for 10 seconds before switching off.**

Cold climates

In very cold climates the oil pressure warning light may take several seconds to extinguish. Similarly, engine cranking times will also increase; at -30°C the starter motor may need to be operated continuously for as long as 30 seconds before the engine will start. For this reason, ensure that all non-essential electrical equipment is switched off.

DRIVING

IMPORTANT INFORMATION

Vehicle stability

Your vehicle has a higher ground clearance and, hence, a higher centre of gravity than ordinary passenger cars to enable the vehicle to perform in a wide variety of different off-road applications. An advantage of the higher ground clearance is a better view of the road, allowing the driver to more easily anticipate problems. Inexperienced drivers should take additional care, remembering that the vehicle is not designed for cornering at the same speeds as conventional passenger cars, any more than a low slung sports car is designed to perform satisfactorily in off-road conditions. As with other vehicles of this type, failure to operate the vehicle correctly may result in loss of control or even rollover.

Vehicle height

The overall height of your vehicle exceeds that of ordinary passenger cars. Always be aware of the height of your vehicle and check the available headroom before driving through low entrances. This is particularly important if the vehicle is fitted with a roof rack or if a sunroof is open.

Instruments and warning lights

Before driving it is important to fully understand the function of the instruments and warning lights (see *'INSTRUMENT PANEL', page 49*).

NOTE: *Red warning lights are of particular importance, illumination indicating that a fault exists. If a red light illuminates, always stop the vehicle and seek qualified assistance before continuing.*

Warming-up

DO NOT warm-up the engine by allowing it to idle at a slow speed. However, remember that the diesel engine must not be run above idle speed until the oil pressure warning light extinguishes.

In the interests of fuel economy, it is advisable to drive the vehicle straight away, as soon as the oil pressure warning light extinguishes.

Remember that harsh acceleration and labouring the engine before the normal operating temperature has been reached can damage the engine.

Running-in

Proper running-in will have a direct bearing on the reliability and smooth running of your vehicle throughout its life.

In particular, the engine, gearbox, brakes and tyres need time to 'bed-in' and adjust to the demands of everyday motoring. During the first 800 km (500 miles), it is essential to drive with consideration for the running-in process and heed the following advice:

- LIMIT maximum road speed to 80 km/h (50 mph). Initially, drive the vehicle on a light throttle and only increase engine speeds gradually once the running-in distance has been completed.
- DO NOT operate at full throttle or allow the engine to labour in any gear.
- AVOID fast acceleration and heavy braking except in emergencies.

Power assisted steering
Power assistance is progressively applied the more the steering wheel is turned. For example; where manual steering effort would normally be greatest (at slow speeds on maximum lock), power assistance is greatest. Similarly, where only minimal steering effort would normally be required (at high speed with the wheels straight ahead), then power assistance is also minimal, thus enabling the driver to benefit from apparently consistent steering effort at all times.

WARNING

Under no circumstances must the steering wheel be held on full lock for more than thirty seconds in one minute, otherwise the steering assembly may be damaged.

NOTE: *Power assistance is dependent on the engine running. If the engine is not running, greater effort will be required to steer the vehicle.*

FUEL ECONOMY

Fuel consumption is influenced by two major factors:

- How your vehicle is maintained.
- How you drive your vehicle.

To obtain optimum fuel economy, it is essential that your vehicle is maintained in accordance with the manufacturer's service schedule.

Items such as the condition of the air cleaner element, tyre pressures and wheel alignment will have a significant effect on fuel consumption. But, above all, the way in which you drive is most important. The following hints may help you to obtain better value from your motoring:

- Avoid unnecessary, short, start-stop journeys.
- Avoid fast starts by accelerating gently and smoothly from rest.
- Do not drive in the lower gears for longer than necessary.
- Decelerate gently and avoid sudden and heavy braking.
- Anticipate obstructions and adjust your speed accordingly well in advance.
- When stationary in traffic, select neutral to improve fuel economy and air conditioning performance.

AUXILIARY EQUIPMENT

WARNING

DO NOT use auxiliary equipment, such as roller generators, that are driven by one wheel of the vehicle, as they could cause failure of the gearbox differential. If the differential lock is engaged in an attempt to avoid damage, the vehicle will drive itself forward.

EMISSION CONTROL SYSTEM

WARNING

Exhaust fumes contain poisonous substances which can cause unconsciousness and may even be fatal.

- ***DO NOT inhale exhaust gases.***
- ***DO NOT start or leave the engine running in an enclosed unventilated area, or drive with the taildoor open.***
- ***DO NOT modify the exhaust system from the original design.***
- ***ALWAYS repair exhaust system leaks immediately.***
- ***If you think exhaust fumes are entering the vehicle have the cause determined and corrected immediately.***

Land Rover vehicles are fitted with emission and evaporative control equipment necessary to meet a number of territorial requirements.

In many countries it is against the law for vehicle owners to modify or tamper with emission control equipment, or to sanction the unauthorised replacement or modification of this equipment. In such cases the vehicle owner and the repairer may both be liable for legal penalties.

It is important to remember that all Land Rover Dealers/Authorised Repairers are properly equipped to perform repairs and to maintain the emission control system on your vehicle.

Catalytic Converter

CATALYTIC CONVERTER*

The exhaust system on some vehicles incorporates a catalytic converter, which converts poisonous exhaust emissions from the engine into environmentally less harmful gases.

WARNING

Severe damage to the catalytic converter could occur if the engine is stopped for any length of time when being driven through water whose level is above the exhaust pipe.

Catalytic converters can be easily damaged through improper use, particularly if the wrong fuel is used, or if an engine misfire occurs. For this reason it is VERY IMPORTANT that you heed the precautions which follow.

Fuel

ONLY use fuel recommended for your vehicle (see *'ENGINES', page 177*).

Starting the engine

- DO NOT continue to operate the starter after a few failed attempts (unburnt fuel may be drawn into the exhaust system, thereby poisoning the catalyst), and do not attempt to clear a misfire by pressing the accelerator pedal - seek qualified assistance.
- When starting a COLD engine, DO NOT drive if a misfire is suspected and do not attempt to clear a misfire by pressing the accelerator - seek qualified assistance.
- Do not attempt to push or tow-start the vehicle.

Driving

- If a misfire is suspected, or the vehicle lacks power while driving, provided the engine has reached its normal operating temperature, it may be driven SLOWLY (at risk of catalyst damage) to a Land Rover Dealer/Authorised Repairer for assistance.
- NEVER allow the vehicle to run out of fuel (the resultant misfire could damage the catalyst).
- Consult your Dealer/Authorised Repairer if your vehicle is burning excessive oil (blue smoke from the exhaust), as this will progressively reduce catalyst efficiency.
- On rough terrain do not allow the underside of the vehicle to be subjected to heavy impacts which could damage the catalytic converter.
- DO NOT overload or excessively 'rev' the engine.
- DO NOT switch off the engine when the vehicle is in motion with a drive gear selected.

WARNING

Exhaust system temperatures can be extremely high - DO NOT park on ground where combustible materials such as dry grass or leaves could come into contact with the exhaust system - in dry weather a fire could result.

Vehicle maintenance

Any engine misfire, loss of engine performance or engine run-on, could seriously damage the catalytic converter. For this reason, it is vital that unqualified persons do not tamper with the engine, and that regular systematic maintenance is carried out by a Land Rover Dealer/Authorised Repairer.

Fuel Filling

SAFETY ON THE FORECOURT

WARNING

Petroleum gases are highly inflammable and, in confined spaces, are also extremely explosive.

Always take sensible precautions when refuelling:

- Switch off the engine.
- Do not smoke or use a naked flame or light, or operate a mobile phone.
- Take care not to spill fuel.
- Do not overfill the tank.

FUEL FILLER

WARNING

DO NOT fully remove the filler cap until any captive tank pressure has been released (wait until the hissing stops).

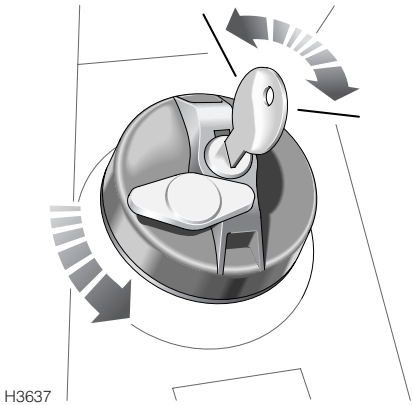

The fuel filler is located in the rear right-hand body side. To unlock the fuel cap:

1. Insert the smaller metal key and turn it 90^0 clockwise.
2. Turn the key 90^0 anti-clockwise and then remove.

The cap should then be unscrewed gradually, as it is designed to allow the fuel tank to vent during the first half turn. Carefully loosen the cap one half turn until resistance is felt, and allow fuel tank pressure to be released. Once the pressure is released (hissing has stopped), it is safe to fully remove the filler cap.

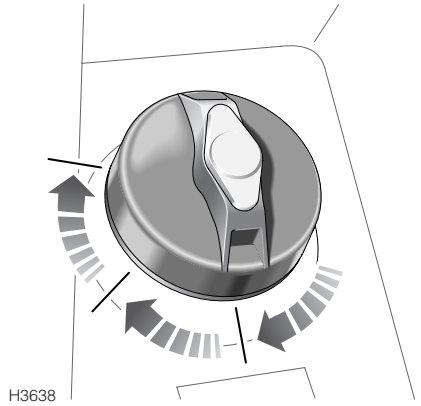

When replacing the filler cap, ensure that the key is removed from the lock, then tighten the cap clockwise until you hear the fuel cap ratchet click at least three times. This locks the cap (the key is not needed). Finally, reposition the key cover over the lock.

TYPE OF FUEL

WARNING

The diesel engines used in these vehicles are not compatible with Bio-diesel fuel!

Use diesel to EN 590.

The quality of diesel fuel (Derv) can vary in different countries and only clean, good quality fuel should be used. It is important that the sulphur content of diesel fuel does not exceed 0.3%; in Europe all supplies should be within this limit, but in other parts of the world, you should check with your supplier.

Ensure the fuel filter element is changed and the fuel sedimenter drained, at the recommended service intervals.

If good quality diesel fuel is unavailable and it is necessary to use poor quality fuel, it may be necessary to have the fuel filter/sedimenter drained regularly.

NOTE: *The use of paraffin (kerosene) as a diesel fuel additive is illegal in the UK.*

WARNING

DO NOT add petrol to the fuel tank of a diesel engine vehicle, as substantial damage to the engine and associated components will occur. Land Rover cannot be held responsible for any costs incurred if such an error is made.

WARNING

If the fuel tank is accidentally filled with petrol it is ESSENTIAL that you contact your Dealer/Authorised Repairer BEFORE attempting to start the engine!

FUEL FILLING

WARNING

DO NOT attempt to fill the tank to its maximum capacity. If the vehicle is to be parked on a slope, in direct sunlight, or high ambient temperature, expansion of the fuel could cause spillage.

Filling station pumps are equipped with automatic cut-off sensing to avoid fuel spillage. Fill the tank SLOWLY until the filler nozzle automatically cuts-off the supply. DO NOT attempt to fill the tank beyond this point or spillage could result due to expansion of the fuel.

The diesel pumps on garage forecourts fill at a maximum of 45 litres per minute. Use of commercial vehicle diesel pumps with a higher fill rate, may result in premature pump cut-off and fuel spillage.

EMPTY FUEL TANK

Td5 diesel engine vehicles*

After running the fuel tank dry, refuel the tank with at least 4.5 litres of diesel fuel, then carry out the following procedure:

1. Turn off the starter switch and wait for 15 seconds.
2. Turn the starter key to position 'II' and wait for 30 seconds.
3. Repeat steps 1 and 2 six times.
4. After the final 30-second period, fully depress the accelerator pedal.
5. Keeping the pedal depressed, start cranking the engine.
6. Continue cranking the engine and as soon as the engine is firing smoothly, ease the accelerator pedal back to approximately halfway through its travel, and release the starter key. The engine should now be running.
7. If the engine fails to start, repeat the process.

During the above procedure, the fuel pump will be heard to operate (priming the engine). This noise is not cause for concern.

IMPORTANT INFORMATION
The engine must NOT be cranked for more than 20 seconds in any one period. If the above procedure is carried out on a vehicle that has NOT run out of fuel, it will result in the engine flooding with fuel and failing to start.

Tdi diesel engine vehicles*

If the vehicle runs out of fuel, then qualified assistance may be required to prime the fuel system before the engine can be restarted.

FUEL CUT-OFF SWITCH

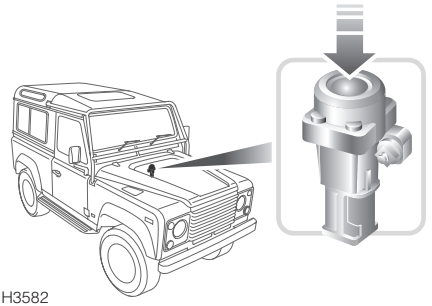

H3582

The fuel cut-off switch is a safety device which, in the event of a collision or sudden impact, automatically cuts off the fuel supply to the engine.

The switch is located on the engine compartment bulkhead. After an impact, the switch must be reset by pressing the rubber top (arrowed in illustration) before the engine can be restarted.

WARNING

ALWAYS check for fuel leaks before resetting the switch!

GEAR LEVER

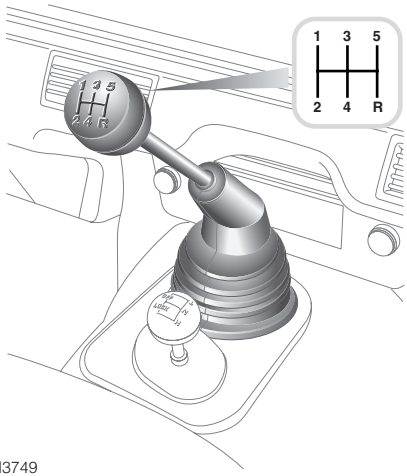

H3749

Manual transmission vehicles feature a five speed main gearbox and a two-speed (LOW & HIGH) transfer box. In addition, a centre differential in the transfer box distributes the drive to the front and rear axles, providing permanent four wheel drive. By using the main gearbox in conjunction with the transfer gears, ten forward and two reverse speeds are available.

The gear positions for the main gearbox are shown on the gear lever knob. Note that when the gearbox is in neutral, the gear lever is spring-loaded to lie naturally between third and fourth gear positions.

WARNING

Do not select reverse gear unless the vehicle is stationary.

Do not attempt to start the engine with the vehicle in gear. The engine must ONLY be started with the main gear lever in neutral and the handbrake applied.

Precautions while driving

- DO NOT rest your hand on the gear lever while driving - pressure from your hand may cause premature wear to the gear selector mechanism.
- DO NOT use the clutch pedal as a foot rest. To prevent unnecessary wear, always keep the left foot well clear of the clutch pedal except when changing gear.
- DO NOT hold the vehicle stationary on a hill by slipping the clutch. This will wear out the clutch. Always use the handbrake.

TRANSFER GEARBOX

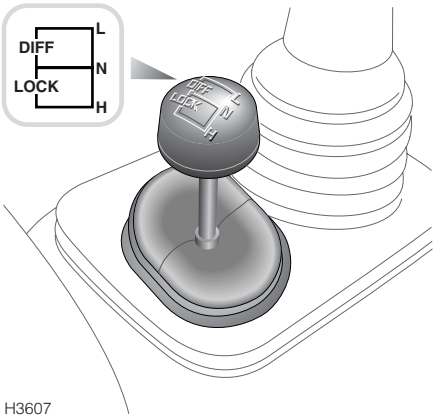

H3607

The second gearbox (known as the transfer box) is used to select either the high or low range of gears. It also has a neutral position between high and low.

High range ('H')
High range should be used for all normal road driving and also for off-road driving across dry, level terrain.

Low range ('L')
Low range should be used ONLY in situations where low speed manoeuvring is necessary, such as reversing a trailer or negotiating a boulder-strewn river bed. Also use Low range for more extreme off-road conditions where progress in High range cannot be maintained. DO NOT attempt to use LOW range gears for normal road driving.

Neutral ('N')
With the transfer box in neutral, drive cannot be transmitted to the road wheels, regardless of the position of the main gear lever. Use transfer gearbox Neutral when being towed.

USING THE TRANSFER BOX

There are two ways of operating the transfer box lever:

1. 'Statically' i.e., shifting while the vehicle is stationary,
2. 'Shift on the move'; this is the recommended method, which, after a little practice, can be carried out smoothly and quickly.

'Static' method
With the vehicle stationary and the engine running, depress the clutch and then move the lever fully forwards (or backwards) in TWO distinct but positive moves - 'high to neutral'.....'neutral to low' (or vice versa).

If there is resistance to the gear engaging - from the neutral position to either high or low, do not force the lever. Instead:

1. Still with the clutch depressed (and the transfer box in neutral), select 2nd gear in main gearbox.
2. Release the clutch momentarily, depress the clutch and then try engagement again.
3. Select appropriate main gearbox gear to pull away.

Changing from high to low on the move
With the vehicle slowing to a stop and travelling NO FASTER THAN 8 km/h (5 mph), depress the clutch and move the transfer lever into neutral. Just before the road wheels stop turning (and with the clutch still depressed) push the lever fully forward into 'L' (low).

NOTE: *Use positive and confident moves, but do not rush the gear change.*

Changing from low to high on the move
Changing from 'L' (low) to 'H' (high) can be achieved without stopping the vehicle, as follows:

1. Apply slight backward pressure to the transfer gear lever in preparation for changing.
2. Then, in three simultaneous moves, depress the clutch, release the accelerator and pull the transfer lever into neutral.
3. Release the clutch pedal for approximately 3 seconds before depressing it again and moving the transfer lever firmly into the high position.
4. Finally, select a suitable main gear, release the clutch and continue driving in the normal way.

THE DIFFERENTIAL LOCK

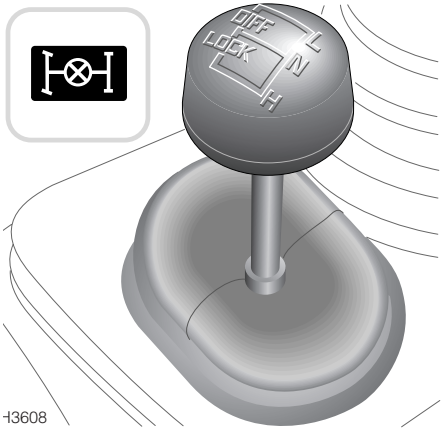

Unlike many four-wheel-drive vehicles, all Land Rover vehicles have permanent four-wheel drive. This is achieved by the inclusion of a lockable differential between the front and rear drive shafts. With the differential locked, the drive shafts to front and rear axles are (in effect) joined together, causing both to rotate at the same speed. This is a normal feature with all four-wheel-drive vehicles and enhances traction on difficult off-road surfaces. However, with the differential unlocked, the different running requirements of the two axles can be accommodated, thereby enabling Land Rover vehicles to operate permanently in four-wheel drive for both road AND off-road use.

Selecting diff lock
The diff lock can be engaged or disengaged either with the vehicle stationary, or when driving at any road speed. However, with the vehicle in motion, it is ESSENTIAL to be travelling on firm ground, in a straight line, and without wheel slip.

Transfer Gearbox

WARNING

DO NOT engage the diff lock if one or more wheels are slipping - this could damage the transmission. If wheels are slipping, ease off the accelerator before engaging the diff lock.

DO NOT engage the diff lock from the transfer neutral position.

To lock the differential:
Briefly ease the throttle and move the transfer gear lever to the left - from either 'H' (high) or 'L' (low) position (the warning light on the instrument panel will illuminate).

To unlock the differential:
Move the transfer gear lever to the right - to either 'H' (high) or 'L' (low) position as required; when the diff lock disengages, the warning light will extinguish.

When to use the diff lock
As a general rule, the differential should only be locked in order to drive off-road on loose and slippery surfaces. ALWAYS unlock the differential for normal road driving or as soon as a hard grippy surface is reached, whether high or low gears are selected.

NOTE: *A valuable introduction to off-road driving, which includes many useful references to the transfer gearbox and the diff lock, is included in the 'Off-road driving' section of this handbook.*

WARNING

If the vehicle is driven on normal road surfaces with the differential locked, the steering will feel stiff, excessive tyre wear will occur and the transmission will be 'wound up'. This places excessive strain on the transmission.

Diff lock warning light



The amber warning light in the instrument panel illuminates when the diff lock is actually engaged - rather than when it has been selected. Similarly, it will only extinguish when the diff lock is actually disengaged. This accounts for a slight delay between diff lock deselection and the warning light extinguishing, which is quite normal.

IMPORTANT INFORMATION

Transmission 'wind up'
If the warning light is obviously reluctant to extinguish after the diff lock has been deselected, some transmission 'wind up' may be present.
Reversing the vehicle a short distance and then going forward will usually 'unwind' the transmission and extinguish the light and the vehicle can be driven as normal.
However, if after two or three attempts to 'unwind' the transmission the light remains on, consult your dealer AS SOON AS POSSIBLE.

WARNING

DO NOT drive the vehicle at speeds in excess of 60 km/h (40 mph) with the differential locked.

Brakes

FOOT BRAKE

For your safety, the hydraulic braking system operates through dual circuits. If one circuit should fail, the other will continue to function. However, in the event of brake failure where only one circuit is operational, the vehicle should only be driven at slow speed to the nearest qualified dealer. In these circumstances, exercise extreme caution and be aware that increased brake pedal travel, greater pedal pressure, and longer stopping distances will be experienced.

Servo assistance

The braking system is servo assisted, but ONLY when the engine is running. Without this assistance greater braking effort is necessary to safely control the vehicle, resulting in longer stopping distances. Always observe the following precautions:

- NEVER allow the vehicle to freewheel with the engine turned off.
- ALWAYS take particular care when being towed with the engine turned off.
- If the engine should stop for any reason while the vehicle is in motion, bring the vehicle to a halt as quickly as traffic conditions safely allow, and DO NOT pump the brake pedal as the braking system may lose any remaining assistance available.

Brake warning light



If the warning light in the instrument panel illuminates while driving, and the handbrake is fully released, a fault with the braking system is indicated. Check the brake fluid level; if the light continues to illuminate, seek qualified assistance before continuing.

Brake pads

Brake pads require a period of bedding in. For the first 800 km (500 miles), you should avoid situations where heavy braking is required.

Remember! Regular servicing is vital to ensure that the brake pads are examined for wear and changed periodically to ensure long-term safety and optimum performance.

WARNING

DO NOT rest your foot on the brake pedal while travelling as this may overheat the brakes, reduce their efficiency and cause excessive wear.

NEVER move a vehicle without the engine running because braking assistance will not be available. The pedal brakes will still function, but more pressure will be required to operate them.

If the brake warning light should illuminate while the vehicle is in motion, bring the vehicle to a halt as quickly as traffic conditions and safety permit and seek qualified assistance before continuing. DO NOT pump the brake pedal - the braking system may lose any remaining servo assistance available.

Wet conditions

Driving through water or even very heavy rain may adversely affect braking efficiency. Always dry the braking surfaces by intermittent light application of the brakes, first ensuring that you are at a safe distance from other road users.

HANDBRAKE

Unlike most other vehicles, the handbrake operates on the rear propeller shaft, and NOT on the road wheels. This may result in slight movement of the vehicle after the handbrake is applied.

To engage the handbrake, pull the lever up fully.

To release, pull the lever up slightly, depress the button and lower the lever.

Always apply the handbrake fully whenever you park.

When parking on a slope, do not rely on the handbrake alone to hold the vehicle, park in a low forward gear when facing uphill and in reverse gear when facing downhill. For extra security on steep slopes, move the transfer lever into low range or engage the diff lock.

WARNING

DO NOT apply the handbrake while the vehicle is in motion as this could result in loss of vehicle control and damage to the transmission.

DO NOT rely on the handbrake to operate effectively if the vehicle has been subjected to immersion in mud and water (see 'Off-road driving' section).

ANTI-LOCK BRAKES*

WARNING

ABS cannot overcome the physical limitations of stopping the vehicle in too short a distance, cornering at too high a speed, or the danger of aquaplaning, i.e. where a layer of water prevents adequate contact between the tyres and the road surface.

The fact that a vehicle is fitted with ABS must never tempt the driver into taking risks that could affect his/her safety or that of other road users. In all cases, it remains the driver's responsibility to drive within normal safety margins, having due consideration for prevailing weather and traffic conditions.

The driver should always take account of the surface to be travelled over and the fact that brake pedal reactions will be different to those experienced on a non-ABS vehicle.

The purpose of the anti-lock braking system (ABS) is to allow efficient braking without wheel locking - thereby allowing the driver to retain steering control of the vehicle.

Under normal braking conditions, (where sufficient road surface friction exists to reliably bring the vehicle to a halt without the wheels locking), ABS will not be activated. However, should the braking force exceed the available adhesion between the tyres and the road surface, then ABS will automatically come into operation. This will be recognisable by a rapid pulsation felt through the brake pedal.

In normal road use, in an emergency situation full braking effort should always be applied even when the road surface is slippery. The anti-lock braking system constantly monitors the speed of each wheel and varies braking pressure to each, according to the amount of traction available, thereby ensuring that the wheels do not lock.

No matter how hard you brake, you should be able to continue steering the vehicle as NORMAL.

- DO NOT pump the brake pedal at any time; this will interrupt operation of the system and may increase braking distance.
- NEVER place additional floor matting or any other obstruction under the brake pedal. This restricts pedal travel and therefore braking efficiency is impaired.

Warning light



The anti-lock braking system incorporates a monitoring system, which checks that all the electrical components are in working order, as soon as the starter switch is turned on and also at frequent intervals during your journey.

The warning light on the instrument panel is an important part of this system. The light should illuminate for approximately 1 second as a bulb and system check when the starter switch is turned to position 'II' and briefly extinguish before coming on again. If the light does not extinguish and then illuminate again, a fault has occurred with the ABS system and you should consult with a Land Rover Dealer/Authorised Repairer at the earliest opportunity.

The warning light will remain illuminated until the vehicle is driven above approximately 7 km/h (5 mph).

If the light remains on, or illuminates while driving, a fault has been detected by the self monitoring system and full ABS control may not be available - consult your dealer at the earliest opportunity.

The normal braking system remains fully operational and is not affected by partial or full loss of the ABS. However, braking distances may increase.

Off-road driving

While anti-lock braking is designed to operate equally effectively in 'off-road' driving conditions, on certain surfaces total reliance on the system may be unwise - remember, in normal circumstances, anti-lock braking operates only AFTER the driver has already lost control. It cannot reliably compensate for driver error or inexperience on difficult off-road surfaces.

Note the following:

- On soft or deep surfaces such as powdery snow, sand or gravel, and on extremely rough ground, the braking distance required by the anti-lock braking system may be greater than for normal braking, even though improved steering would be experienced. This is because the natural action of locked wheels on soft surfaces is to build up a wedge of surface material in front which assists the wheels to stop.
- If the vehicle is stopped on a very steep slope where little traction is available, it may slide with the wheels locked because there is no wheel rotation to signal movement to the ABS. To counteract this, briefly release the brakes to permit some wheel movement, then re-apply the brakes to allow ABS to gain control.
- Before driving off-road read and thoroughly understand the *'Off-road driving'* section of this handbook.

Traction Control

ELECTRONIC TRACTION CONTROL*

The purpose of electronic traction control is to aid traction when one or more wheels are spinning while others have good grip, e.g. if one wheel is on ice and others are on tarmac. The system works by applying the brake to a spinning wheel in order to transfer torque to the remaining wheels.

NOTE: *Traction control can operate up to speeds of 50 km/h (30 mph).*

Warning light



The instrument panel has a traction control warning (TC) which illuminates for a minimum of 2 seconds whenever the system is active and also illuminates as a bulb check (for approximately 4 seconds) when the starter switch is turned to position 'II'.

If there is a fault with the system, the warning light will illuminate continuously and remain illuminated when the vehicle is stopped, in which case you should contact your Dealer/Authorised Repairer at the earliest opportunity.

In the unlikely event that traction control operates continuously for too long (in excess of approximately 1 minute), then the control unit shuts down to allow cooling and the warning light flashes for at least 10 seconds.

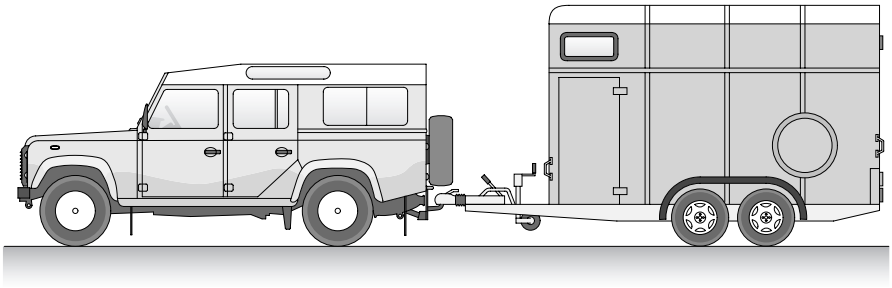

H4928

TOWING

The torque ranges of Land Rover engines allow maximum-weight loads to be pulled smoothly from standstill, and reduce gear changing on hills or rough terrain. A smoother start will be achieved with trailers over 2000 kg (4400 lb) by moving off in low range then changing to high range while on the move (see *'TRANSFER GEARBOX', page 88*).

It is the driver's responsibility to ensure that the towing vehicle and trailer/caravan are loaded and balanced so that the combination is stable when in motion. When preparing your vehicle for towing, pay attention to any instructions provided by the trailer/caravan manufacturer as well as to the information that follows.

WARNING

To preserve the vehicle's handling and stability, it is recommended that you fit only towing accessories designed and approved by Land Rover.

WARNING

DO NOT exceed the gross vehicle weight, maximum rear axle load, maximum trailer weight and tow hitch load (nose weight). See 'TOWING WEIGHTS', page 187. Exceeding allowable loads will increase the risk of tyre or suspension failure, increase stopping distance, and adversely affect vehicle handling and stability.

DO NOT use the rear towing eyes to tow a trailer or caravan - serious damage to the vehicle may result.

If a NATO Hook or a Jaw and Pintle type towing accessory is to be fitted to your vehicle, DO NOT attach them directly to the chassis rear cross-member - it is essential that an adaptor plate kit (available from a Land Rover Dealer/Authorised Repairer) is also fitted.

Balancing the combination
To ensure optimum stability, it is essential that the trailer adopts a level aspect. In other words, the trailer must be level with the ground, with the towing hitch and trailer drawbar set at the same height (note the illustration at the top of the previous page). This is particularly important when towing twin axle trailers! Adjust the height of the hitch point if necessary.

Points to remember:

- When calculating the laden weight of the trailer, remember to include the weight of the trailer PLUS the load.
- The maximum trailer nose weight plus the combined weight of the vehicle's load carrying area and rear seat passengers must never exceed the specified maximum rear axle load (see *'TOWING WEIGHTS', page 187*).

NOTE: *European legislation allows for the GVW to be increased by 100 kg (220 lb). This allowance is included in the stated figure. See, 'TOWING WEIGHTS', page 187.*

- Where the luggage load can be divided between trailer and tow vehicle, loading more weight into the vehicle will generally improve the stability of the combination. However, ensure that the gross vehicle and maximum rear axle weights are not exceeded and that the combination remains level.
- For maximum stability, ensure that loads are properly secured and unable to shift position during transit. Also, position loads so that most of the weight is placed close to the floor and, where possible, immediately above or close to the trailer axle(s).
- If the actual trailer weight exceeds the maximum permissible towed weight (see *'TOWING WEIGHTS', page 187*), the towing vehicle payload must be restricted, i.e. to less than the gross vehicle weight (see *'VEHICLE WEIGHTS', page 185*). Ensure that the loaded combination is within the gross train weight limit. This may require passengers and/or luggage to be removed from the vehicle.
- Towing regulations vary from country to country. Always ensure national regulations governing towing weights and speed limits are observed (refer to the relevant national motoring organisation for information). The vehicle's maximum permissible towed weight refers to its design limitations and NOT to any specific territorial restriction (see *'TOWING WEIGHTS', page 187*).

NOTE: *The maximum speed when towing is 100 km/h (60 mph).*

Vehicle weights
When loading a vehicle to its maximum (GVW), take account of the load distribution to ensure that axle loads do not exceed the permitted maximum values. It is your responsibility to limit the vehicle load in such a way that neither the maximum axle loads nor the GVW are exceeded. The most accurate method of determining load distribution is by using a public weighbridge.

Nose weight should be approximately 7% of the actual trailer laden weight to maintain optimum stability. Nose weight can be measured using a proprietary brand of nose weight indicator.

Towing on severe inclines
If a journey includes severe inclines and the Gross Train Weight (the maximum permissible weight of vehicle, plus trailer, see *'TOWING WEIGHTS', page 187*) is towed, ensure that the grille and radiator are free from obstruction and that only high quality fuel is used. This enables the engine and the cooling system to operate more efficiently.

NOTE: *Above 300 metres (1,000 ft) the effects of altitude can adversely affect engine performance and also cause overheating.*

Correct gear selection will improve vehicle performance: On vehicles with manual transmission, select the highest practical gear that can be maintained without causing the engine to labour. On vehicles fitted with automatic transmission, select 'D' (Drive) and, where possible, maintain a speed that minimises automatic gear changes.

If severe inclines are encountered when towing at high altitude and in a high ambient temperature 30°C (86°F) or greater, the effective Gross Train Weight will be reduced by up to 400 kg (882 lb). Therefore, it may be necessary to reduce the vehicle and/or trailer weight to help counter the reduced engine performance caused by the thinner atmosphere experienced at high altitudes.

Tachographs
In some circumstances it is necessary for a tachograph to be fitted. In Europe, this is usually when the vehicle is used for business purposes and the combined maximum weights of vehicle and trailer exceeds 3500 kg (7700 lb).

Trailer socket
The vehicle connector provides a 5 amp output, which must NOT be exceeded.
If it is required to exceed 5 amps, a 12S and a 13 pin accessory harness kit is available from your Land Rover Dealer/Authorised Repairer, increasing the output to 15 amps.

ESSENTIAL TOWING CHECKS	
Tyre pressures:	Ensure trailer/caravan tyres are at the pressures recommended by the trailer manufacturer.
Nose weight:	It is recommended that the nose weight should be approximately 7% of gross caravan/trailer weight up to maximum of 150 kg (330 lb). If the vehicle is loaded to the Gross Vehicle Weight (GVW), the nose weight is limited to150 kg (330 lb). The nose weight can be increased up to 250 kg (550 lb) total nose weight, however, vehicle payload **MUST BE RESTRICTED** to ensure that the GVW and rear axle load are not exceeded, see *'TOWING WEIGHTS', page 187*.
Breakaway cable or secondary coupling	A breakaway cable or secondary coupling **MUST** be attached. If the trailer/caravan is fitted with brakes, it is usual for an attached breakaway cable to operate the brakes in the event of the coupling becoming detached. See your trailer manufacturer's literature. If your trailer does not have a breakaway cable, a secondary coupling must be attached. Use a suitable point on the towing bracket to securely attach the coupling. It is not advisable to loop cables or couplings around the neck of the tow ball as they could slide off.

SPARE WHEEL

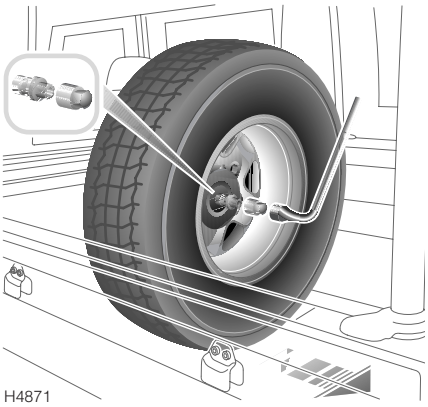
H4871

Use the wheel nut wrench to remove the nut securing the spare wheel cover plate and then lift off the wheel.

NOTE: *In some markets, vehicles fitted with alloy wheels have a locking wheel nut fitted to each wheel, including the spare. In other markets, vehicles fitted with alloy wheels have a single locking wheel nut fitted to the spare wheel only.*

WARNING

DO NOT use the spare wheel securing nuts in place of the road wheel nuts, or use the road wheel nuts to secure the spare wheel - the nuts are not interchangeable.

The wheels are extremely heavy. Take care when lifting and particularly when removing the spare wheel from its mounting position.

TAILGATE OPERATION

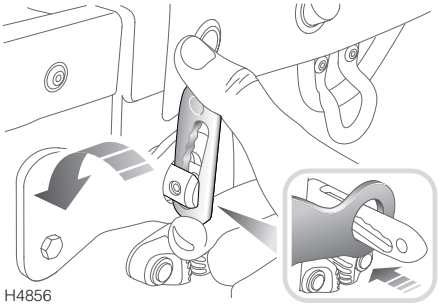
H4856

To latch the tailgate, lift the gate from the horizontal position and locate over both the latch plates as shown above. Pivot the latch plates upwards and forwards through 90^0 and slide down to secure the tailgate in the closed position.

To unlatch the tailgate, reverse the above process, taking care to lower the tailgate in a controlled manner.

NOTE: *The tailgate is not a load-bearing surface.*

FITTING AND REMOVING THE CANOPY

Fitting

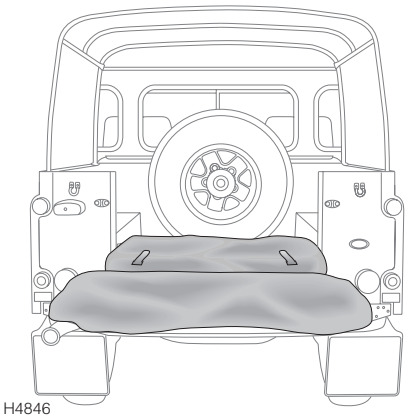

H4846

Lay the canopy on the open tailgate.

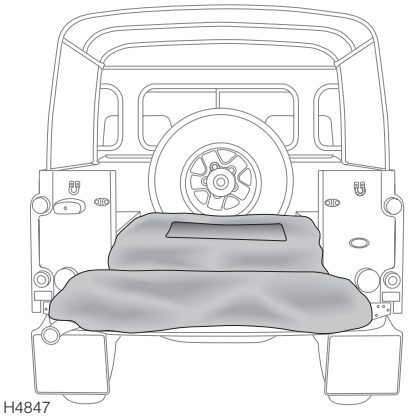

H4847

Unfold the canopy into the load area.

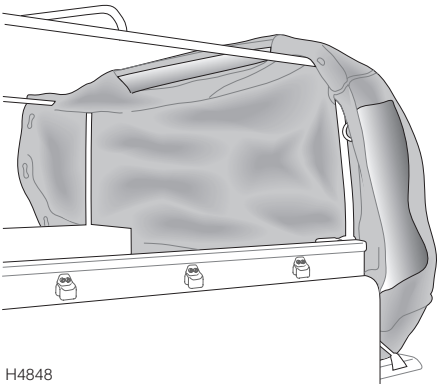

H4848

From the rear of the vehicle, lift the canvas over the frame, ensuring that the front window is against the window of the cab.

NOTE: *This operation is best performed by two people.*

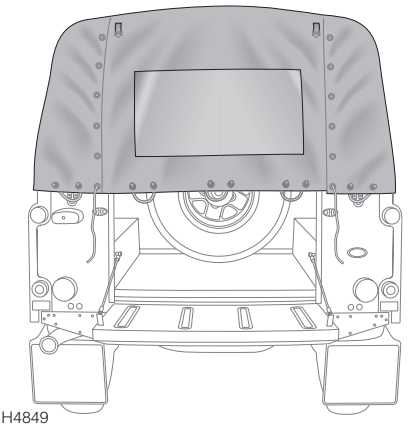

H4849

Prior to fastening the canopy to the vehicle it should resemble the illustration above.

Cab Pick-up

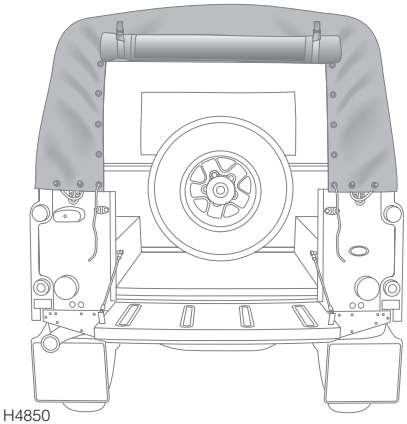

H4850

To aid access to the rear of the vehicle, the canopy rear screen can be rolled up and retained in position with the tether straps.

NOTE: *The next operation is best carried out after first removing the spare wheel.*

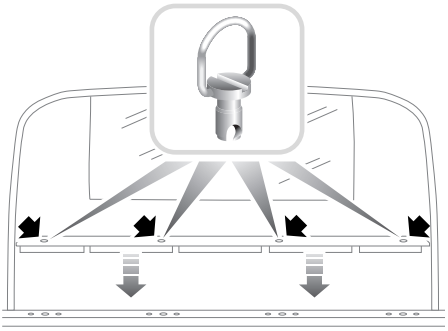

H4851

Slot the metal retaining strip into the canvas pocket below the cab window. Align the holes in the strip with those in the body and insert the 4 turnbuckles. Turn them clockwise to hold the canvas in position.

NOTE: *Re-attach the spare wheel.*

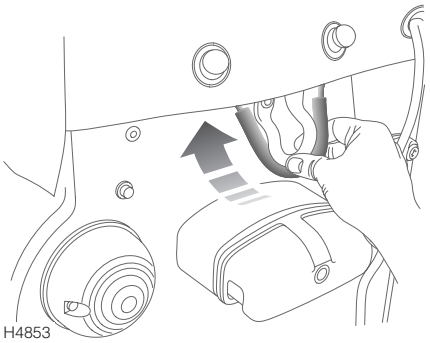

H4853

Pull and attach both rubber loops to the hooks above the rear lights as shown.

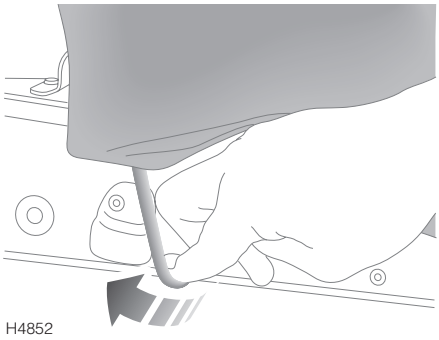

H4852

Starting at the front of the canopy, loop the tie rope over each of the hooks along the side of the vehicle, ensuring that each loop is tightened before the next loop is made.

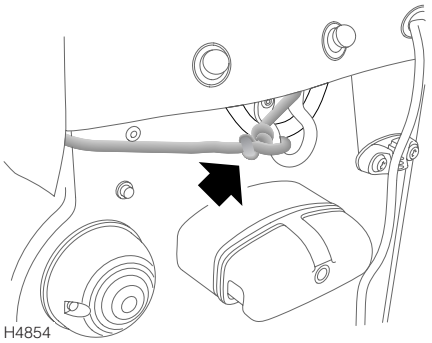
H4854

At the rear of the vehicle, fasten the tie rope to the hook above the rear lights.

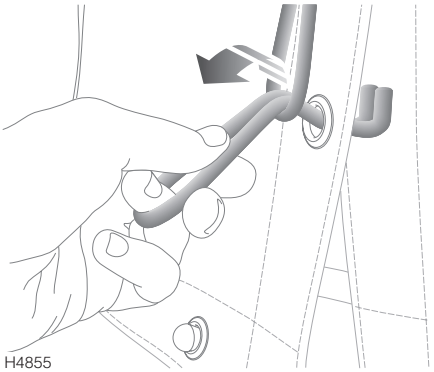
H4855

Unroll the canopy rear screen and secure to the rear panels by threading each rope loop through the loop above and pull downwards as shown.

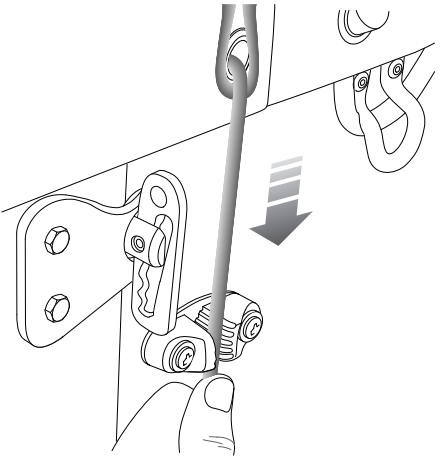
H4857

With the tailgate in the closed position, pull the tie rope through the last loop and then through the gripper unit as shown. Tie off any excess rope length.

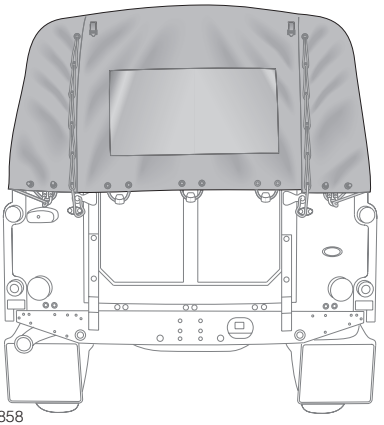
H4858

The finished canopy should look as shown.

Removal

Removal of the canopy is simply a reversal of the fitting process.
Store the canopy behind the rear seats.

CLEANING THE CANOPY

- Use a soft brush to remove dust and flaking dirt from the canopy (not the windows), then soak with a mild soap and water solution to soften encrusted dirt and remove stains, prior to washing.
- Wash using a mild soap and water solution, before rinsing the canopy with clean lukewarm or cold water. Rinse until all traces of soap are removed.
- Never use spirit, petrol or chlorine based cleaning agents, or wash/wax compounds to clean the canopy and windows - wax polishes will become ingrained in the textured finish.
- Never use an automatic car wash, or a high pressure hose.
- Do not aim jets of water at zips or seals.
- Ensure the canopy is dry before folding or removing.
- Improper cleaning and lack of care may cause damage to the canopy and window panels, resulting in water penetration.

WARNING

If the canopy is stained, this should be cleaned within 24 hours of the incident occurring, otherwise the stain may become permanent.

LOAD AREA

When transporting a load within the load area, ensure that the tailgate is closed.

Canopy lashing points around the periphery of the load area can be utilised for lashing items securely.

REAR WINDOW

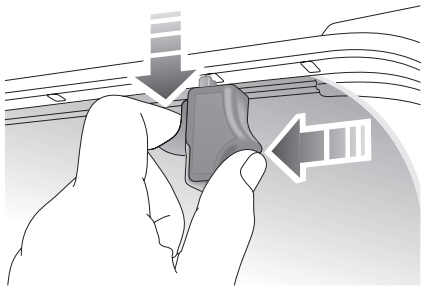

H4870

To open or close the window, squeeze the window catch and slide the window in the required direction.

FRONT FENDER - CHEQUER PLATE*

NOTE: *The front fender - chequer plate is not a load-bearing surface.*

WINDSCREEN PROTECTION RAIL*

NOTE: *The windscreen protection rail is not a rollcage and offers no extra protection in the event of a vehicle rollover.*

SIDE BARS*

NOTE: *The side bars are not load-bearing.*

LUGGAGE SPACE

WARNING

DO NOT carry unsecured equipment, tools or luggage which could move and cause personal injury in the event of an accident or emergency manoeuvre, either on or off road.

ROOF RACKS*

ALWAYS use an approved roof rack and follow the manufacturer's fitting instructions carefully. A full list of all approved accessories is available from your Land Rover Dealer/Authorised Repairer.

IMPORTANT INFORMATION

Always observe the following precautions:

- The **MAXIMUM** load for approved roof rack systems is 75 kg for normal road use and 30 kg off-road. Calculation of the maximum load must include the weight of the roof rack.
- A loaded roof rack can reduce the stability of the vehicle, particularly when cornering and encountering cross winds.
- All loads should be evenly distributed, and secured within the periphery of the roof rack.
- Always secure the load to the side rails, not just to the cross rails.
- Only fit roof racks that have been designed for your vehicle. If in doubt, consult your dealer.
- Driving off-road with a loaded roof rack is not recommended. If it is necessary to stow luggage on the roof rack while driving off-road, all loads must be removed before traversing side slopes.

WINCHES*

A number of different winches, suited to jobs ranging from vehicle recovery to haulage, can be fitted to your Defender. For further information on the types of winch available and their various uses, contact your Land Rover Dealer/Authorised Repairer.

As winch operation will vary considerably on different winch units, it is essential that the manufacturer's operating instructions are understood and followed carefully.

Winch safety

WARNING

If used incorrectly, winches can be extremely dangerous.

ALWAYS follow the manufacturer's operating instructions carefully.

NEVER stand near, or astride a winching cable whilst it is under tension.

ALWAYS wear protective gloves when handling winch cables.

In addition:

- DO NOT attempt to continue winching if the winch has stalled due to overloading.
- Inspect the winch and cable regularly - ALWAYS have worn or damaged parts replaced immediately.
- Only use recommended replacement parts of the same specification as the original equipment - failure to do so may not only damage the winch, but may cause serious personal injury.

After winching

Whilst wearing thick, protective gloves, clean and lubricate the cable with a recommended cable lubricant. For further information, consult your Land Rover Dealer/Authorised Repairer.

WARNING

NEVER allow a cable to kink, coil or overlap on the winch spool.

NOTE: *If a capstan winch is used, ensure the rope is cleaned and dried before stowing.*

POWER TAKE-OFF DRIVES*

Your Defender is capable of providing a static or mobile power source, which can be used to power generators, compressors, pumps and other ancillary equipment, mounted on or under the vehicle, by means of shaft, belt or hydraulic drive. This is possible by having a power take-off drive unit fitted to the transfer gearbox. This provides the basic drive for several variations of power take-off layouts.

The power take-off capability is an integral part of the vehicle design and has been tried and tested under the most rigorous and demanding conditions across the world. Land Rover Dealers/Authorised Repairers provide a full range of power take-off drive units and accessories, designed and built for the Defender.

For static operation, select neutral in the transfer gearbox to disconnect the drive to the road wheels - it is then possible to operate the power take-off independently. The forward gears and hand throttle* can now be used to control the operating speed. To prevent the transmission from being overloaded, it is recommended that the highest gear possible should be used.

The lower gears can be used when lower operating speeds are required, but they should only be used for light workloads and for short periods of time.

If power tale-off is being used while the vehicle is moving, it will operate at a speed in direct proportion to the road speed of the vehicle and to the selected transfer gear ratio.

For more information on the use of power take-off drives and equipment, consult your Land Rover Dealer/Authorised Repairer.

WARNING

DO NOT use auxiliary equipment, such as roller generators, that are driven by one wheel of the vehicle, as they could cause failure of the gearbox differential. If the differential lock is engaged in an attempt to avoid damage, the vehicle will drive itself forward.

HAND THROTTLE*

The hand throttle is for use in conjunction with power take-off equipment (winches, pumps for example), when a relatively constant engine speed is required.

WARNING

DO NOT attempt to use the hand throttle when the vehicle is being driven.

Operating the hand throttle:

1. Select 'N' (neutral) in the transfer gearbox.
2. Pull the hand throttle control out until the desired engine speed is achieved.
3. Twist the control clockwise to lock the throttle in position.

The accelerator pedal can be used to temporarily override the hand throttle (to increase engine speed). Once the accelerator is released, the engine speed will return to the level set by the hand throttle.

To turn the hand throttle off, twist the control fully in (to the closed position).

Ensure the hand throttle is fully closed before driving.

Off-road Driving



Off-road Driving

BEFORE YOU DRIVE 111
BASIC OFF-ROAD TECHNIQUES 111
AFTER DRIVING OFF-ROAD 114
SERVICING REQUIREMENTS 114

Driving Techniques

DRIVING ON SOFT SURFACES & DRY SAND . . 115
DRIVING ON SLIPPERY SURFACES
(ice, snow, mud, wet grass) 115
DRIVING ON ROUGH TRACKS 115
CLIMBING STEEP SLOPES 116
DESCENDING STEEP SLOPES 117
TRAVERSING A SLOPE 117
NEGOTIATING A 'V' SHAPED GULLY 118
DRIVING IN EXISTING WHEEL TRACKS 118
CROSSING A RIDGE 118
CROSSING A DITCH 119
WADING 119

